GS

GS YUASA
Next to you

Делаем жизнь ярче!

PREMIUM QUALITY · 日本 JAPAN TECHNOLOGY · GUARANTEED

Каталог применяемости 2015

WWW.GS-YUASA.SU

Серия High Performance Premium AGM

Беспрецедентно мощные, компактные батареи из Японии с увеличенным счетом сборки пластин. При минимальном размере и весе работают намного эффективнее и обеспечивают максимально высокий пусковой ток. Батареи залиты и активированы на заводе. Благодаря уникальному герметичному дизайну, АКБ можно устанавливать под разными углами. Данная серия обладает всеми преимуществами линейки Maintenance Free AGM.

Серия High Performance AGM

Аккумуляторные батареи с более высокой производительностью обеспечивают улучшенные пусковые токи. Некоторые модели активированы на заводе. АКБ полностью герметичны, а также обладают всеми преимуществами Maintenance Free AGM батареи.

Серия Maintenance Free AGM

Аккумуляторные батареи серии GS Maintenance Free AGM обладают улучшенной свинцово-кальциевой технологией и низким внутренним сопротивлением сепараторов, за счет этого обеспечивается повышенная производительность при старте даже при низкой температуре. Сепараторы из стекловолокна абсорбируют электролит и обеспечивают полную герметичность. AGM-батареи максимально виброустойчивы, не требуют доливки и обладают низкой степенью саморазряда.

Серия Heavy Duty

Серия Heavy Duty обладает повышенными пусковыми токами и более высокой виброустойчивостью в сравнении с серией Conventional . В батарее используется специальный свинцовый сплав для снижения саморазряда и максимизации пускового тока при запуске, даже спустя месяцы хранения. Специальный компаунд в составе активной массе предотвращает повреждение батареи из-за вибрации.

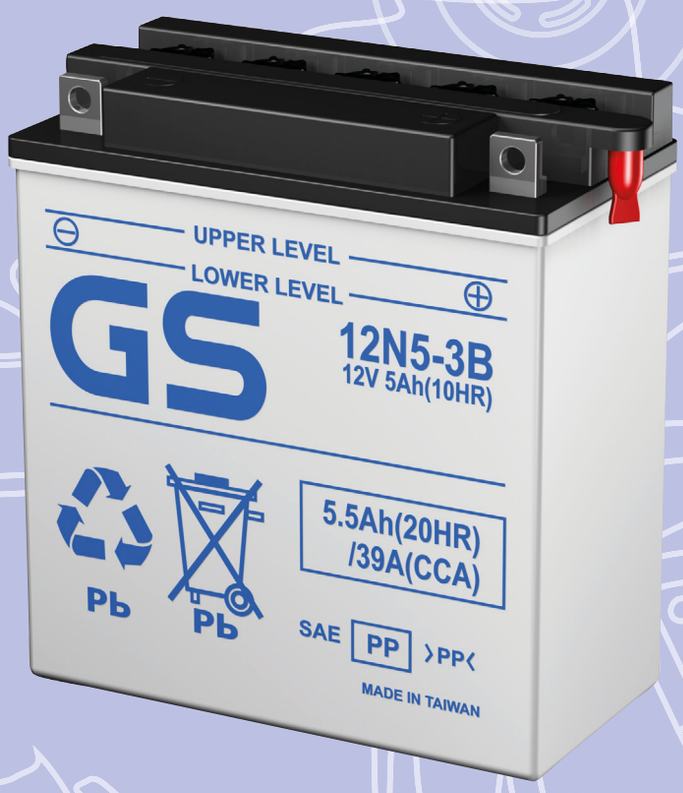

Серия Conventional

В серии Conventional используется запатентованная технология улучшенного свинцового сплава Polymion. Данная технология обеспечивает большую на 30% мощность при старте, в сравнении с другими традиционными батареями. Улучшенный сепаратор уменьшает внутреннее сопротивление, обеспечивая сокращение времени зарядки и превосходное удержание заряда.

СОДЕРЖАНИЕ

Особенности и преимущества	5
Спецификации	6-9
Конфигурация клемм	10
Таблица взаимозаменяемости и маркировка батарей GS	11
Серия GS YTZ	12-13
Таблица взаимозаменяемости батарей GS и YUASA	14-15

ПРИМЕНЯЕМОСТЬ

Мотоциклы и скутеры	16-89
Квадроциклы	90-96
Снегоходы	97-100
Мотовездеходы	101
Гидроциклы	102-103

Примечание:
Сведения о замене аккумулятора, опубликованные в этом каталоге, были получены от производителей оборудования, перечисленных ниже. Пользователи должны учесть, что информация, содержащаяся в этом каталоге актуальна на момент публикации. Информация может быть изменена после уведомления от производителя оборудования или опыта установки пользователем на месте. Пользователи должны всегда использовать самую последнюю редакцию каталога. GS не несет ответственности за точность информации, размещенной в каталоге. В то же время мы сделали все возможное, чтобы информация в каталоге была как можно точной. GS несет никакой ответственности за ущерб, возникший в результате использования информации из этого каталога.

ОСОБЕННОСТИ И ПРЕИМУЩЕСТВА

Особенности	Преимущества	AGM	Heavy Duty	Conventional
Ток холодной прокрутки	Обеспечивает уверенный старт при низкой температуре	★★★★★	★★★★☆	★★★☆☆
Виброустойчивость	Предотвращает повреждение батареи из-за вибрации.	★★★★★	★★★★☆	★★★☆☆
Качество GS	Обеспечивает надежный запуск и долгий срок службы	✓	✓	✓
Специальный свинцовый сплав решетки	Сокращает саморазряд	✓	✓	✓
Герметичный дизайн	Исключает протечки электролита	✓		
Необслуживаемое исполнение	Устраняет необходимость в проверке уровня электролита и его доливки	✓		
Сепараторы из стекловолокна (AGM)	Снижает внутреннее сопротивление и повышает производительность батареи	✓		
Уплотненная компоновка пластин	Обеспечивает целостность активной массы, увеличивая жизненный цикл батареи	✓		

МОЩНАЯ И ВЫСОКОПРОИЗВОДИТЕЛЬНАЯ ЛИНЕЙКА ОТ GS

СПЕЦИФИКАЦИИ

HIGH PERFORMANCE PREMIUM AGM

Модель	Прим.	Тип	Емкость Ач (10ч)	Емкость Ач (20ч)	Габариты мм Д	Ш	В	Вес с электролитом, (кг)	Объем кислоты (литры)	Зарядный ток (А)	Ток CCA*, (A) -18°C	Тип клемм	Расположение клемм
YTZ7S		WC	6	6.3	113	70	105	2.1	—	0.6	130	8	
YTZ10S		WC	8.6	9.1	150	87	93	3.2	—	0.9	190	11	
YTZ12S		WC	11	11.6	150	87	110	3.7	—	1.1	210	11	
YTZ14S		WC	11.2	11.8	150	87	110	3.9	—	1.1	230	11	

HIGH PERFORMANCE AGM

Модель	Прим.	Тип	Емкость Ач (10ч)	Емкость Ач (20ч)	Габариты мм Д	Ш	В	Вес с электролитом, (кг)	Объем кислоты (литры)	Зарядный ток (А)	Ток CCA*, (A) -18°C	Тип клемм	Расположение клемм
GT7B-4		WC	6.5	6.8	151	66	94	2.7	—	0.7	110	11	
GT9B-4		WC	8	8.4	151	70	106	3.5	—	0.8	130	11	
GT12B-4		WC	10	10.5	151	70	131	4.1	—	1.0	180	11	
GT14B-4		WC	12	12.6	151	70	146	4.6	—	1.2	190	11	
GTX14H-BS		CP	12	12.6	150	87	145	4.8	0.69	1.2	240	15	
GTX20CH-BS		CP	18	18.9	150	87	161	6.1	0.82	1.8	270	15	
GTX20H-BS		CP	18	18.9	175	87	155	6.3	0.93	1.8	310	8	
GTX20HL-BS		CP	18	18.9	175	87	155	6.3	0.93	1.8	310	8	
GTX24HL-BS		CP	21	22.1	205	87	162	7.9	0.99	2.1	350	8	
GIX30L-BS		CP	30	31.6	166	126	175	9.9	1.40	3.0	385	8	

MAINTENANCE FREE AGM

Модель	Прим.	Тип	Емкость Ач (10ч)	Емкость Ач (20ч)	Габариты мм Д	Ш	В	Вес с электролитом, (кг)	Объем кислоты (литры)	Зарядный ток (А)	Ток CCA*, (A) -18°C	Тип клемм	Расположение клемм
GTR4A-BS		CP	2.3	2.4	114	49	86	1.1	0.14	0.3	45	13	
GT4B-BS		CP	2.3	2.4	114	39	86.5	1.1	0.12	0.3	40	14	
GT4L-BS		CP	3	3.2	114	71	86.5	1.6	0.18	0.4	40	8	
GTX4L-BS		CP	3	3.2	114	71	86.5	1.6	0.18	0.4	50	8	
GTX5L-BS		CP	4	4.2	114	71	106	2.0	0.23	0.5	80	8	
GT7B-BS		CP	6.5	6.8	151	66	94	2.6	0.30	0.7	120	11	
GTX7A-BS		CP	6	6.3	151	88	94	2.6	0.35	0.7	105	8	
GTX7L-BS		CP	6	6.3	114	71	131	2.7	0.33	0.7	100	8	
GT9B-BS		CP	8	8.4	150	70	105	3.4	0.40	0.8	120	11	
GTX9-BS		CP	8	8.4	151	88	106	3.2	0.40	0.9	135	8	
GT12A-BS		CP	10	10.5	151	88	105	3.7	0.50	1.0	175	11	
GT12B-BS		CP	10	10.5	150	69	130	4.1	0.50	1	210	11	
GTX12-BS		CP	10	10.5	151	88	131	4.2	0.56	1.2	180	8	
GT14B-BS		CP	12	12.6	150	70	145	4.6	0.60	1.2	210	11	
GTX14-BS		CP	12	12.6	151	88	146	5.0	0.68	1.4	200	8	
GTX14L-BS		CP	12	12.6	150	87	145	4.6	0.69	1.4	200	8	
GTX16-BS		CP	14	14.7	150	87	161	5.3	0.78	1.4	230	8	
GTX16-BS-1		CP	14	14.7	150	87	161	5.3	0.78	1.4	230	1	
GTX14A-BS		CP	12	12.6	136	91	168	5.0	0.73	1.2	190	8	
GTX14AL-BS		CP	12	12.6	136	91	168	5.0	0.73	1.2	190	8	
GTX14AH-BS		CP	12	12.6	136	91	180	5.1	0.73	1.2	190	8	
GTX14AHL-BS		CP	12	12.6	136	91	180	5.1	0.73	1.2	190	8	
GT16-BS		CP	16	16.8	177	102	157	6.6	0.98	1.6	230	8	
GT16L-BS		CP	16	16.8	177	102	157	6.6	0.98	1.6	230	8	
GTX18L-BS		CP	18	18.9	207	91	164	7.3	1.14	1.8	250	8	
GT19BL-BS		CP	17.7	19.0	186	82	171	5.7	0.95	1.9	170	12	
GTX20-BS		CP	18	18.9	177	89	157	6.5	0.85	1.8	270	8	
GTX20L-BS		CP	18	18.9	177	89	157	6.5	0.85	1.8	270	8	

* CCA (ток холодной прокрутки) теоретически рассчитанная величина, данная для справки.

DC = сухозаряженная батарея (1 батарея без электролита)
CP = сухозаряженная батарея в упаковке 2-в-1 (1 батарея в комплекте с упаковкой электролита)
WC = залитая заряженная батарея (1 залитая заряженная батарея)

HEAVY DUTY

Модель	Прим.	Тип	Емкость Ач (10ч)	Емкость Ач (20ч)	Габариты мм Д	Ш	В	Вес с электролитом, (кг)	Объем кислоты (литры)	Заряд-ный ток (А)	Ток CCA*, (A) -18°C	Тип клемм	Расположение клемм
CB2.5L-C		DC	2.5	2.6	81	71	106	1.1	0.3	0.3	15	–	100±
CB2.5L-C-1		DC	2.5	2.6	81	71	106	1.1	0.3	0.3	15	–	
CB2.5L-C-2		DC	2.5	2.6	81	71	106	1.1	0.3	0.3	15	–	100±
CB3L-A		DC	3	3.2	99	57	113	1.3	0.3	0.3	30	6	
CB3L-B		DC/CP	3	3.2	99	57	113	1.3	0.3	0.3	30	6	
CB4L-A		DC	4	4.2	121	71	94	1.7	0.3	0.4	45	8	
CB4L-B		DC/CP	4	4.2	121	71	94	1.7	0.3	0.4	45	8	
CB5L-B		DC/CP	5	5.3	121	62	132	2.2	0.4	0.5	60	10	
CB7-A		DC	8	8.4	136	76	136	2.9	0.6	0.8	105	5	
CB7-B2		DC	8	8.4	136	76	136	2.9	0.6	0.8	105	8	
CB7C-A		DC	7	7.4	130	90	114	3.0	0.6	0.8	75	3	
CB7L-B		DC	8	8.4	136	76	136	2.9	0.6	0.8	105	5	
CB7L-B2		DC/CP	8	8.4	136	76	136	2.9	0.6	0.8	105	8	
CB9-A		DC	9	9.5	136	76	142	3.3	0.6	0.9	115	5	
CB9-B		DC/CP	9	9.5	136	76	142	3.3	0.6	0.9	115	5	
CB9A-A		DC	9	9.5	137	77	157	3.3	0.6	0.9	115	5	
CB9L-A2		DC	9	9.5	136	76	142	3.3	0.6	0.9	115	8	
CB9L-B		DC	9	9.5	135	75	140	3.3	0.6	0.9	115	5	
CB9L-B2		DC	9	9.5	136	76	142	3.3	0.6	0.9	115	8	
CB10A-A		DC	10	10.5	136	91	160	3.9	0.6	1.0	120	5	
CB10A-A2		DC	10	10.5	136	91	160	3.9	0.6	1.0	120	4	
CB10L-A2		DC/CP	10	10.5	136	91	147	4.2	0.7	1.0	120	8	
SCB10L-A2		DC	10	10.5	136	91	147	4.2	0.7	1.0	120	8	With Sensor
CB10L-B		DC/CP	10	10.5	136	91	147	4.2	0.7	1.0	120	5	
CB10L-B2		DC/CP	10	10.5	136	91	147	4.2	0.7	1.0	120	8	
CB10L-BP		DC	12	12.6	135	90	145	4.0	0.8	1.1	165	5	
CB12A-A		DC/CP	12	12.6	136	81	162	4.2	0.7	1.2	180	5	
SCB12A-A		DC	12	12.6	136	81	162	4.2	0.7	1.2	180	5	With Sensor
CB12A-B		DC	12	12.6	136	81	162	4.2	0.7	1.2	180	6	
CB12A-B2		DC	12	12.6	136	81	162	4.2	0.7	1.2	180	8	
CB12AL-A		DC/CP	12	12.6	136	81	162	4.2	0.7	1.2	180	5	
CB12AL-A2		DC/CP	12	12.6	136	81	162	4.2	0.7	1.2	180	8	
CB12B-B2		DC	12	12.6	160	91	132	4.3	0.8	1.2	180	4	
CB12C-A		DC/CP	12	12.6	135	81	177	4.1	0.7	1.2	180	8	
CB14-A2		DC/CP	14	14.7	136	91	169	4.5	0.8	1.4	190	8	
CB14-B2		DC/CP	14	14.7	136	91	169	4.5	0.8	1.4	190	8	
CB14A-A		DC	14	14.7	136	91	181	4.9	0.8	1.4	190	5	
CB14A-A1		DC	14	14.7	136	91	181	4.9	0.8	1.4	190	5	
CB14A-A2		DC	14	14.7	136	91	181	4.9	0.8	1.4	190	8	
CB14L-A1		DC	14	14.7	136	91	169	4.5	0.8	1.4	190	1	
CB14L-A2		DC/CP	14	14.7	136	91	169	4.5	0.8	1.4	190	8	
CB14L-B2		DC/CP	14	14.7	136	91	169	4.5	0.8	1.4	190	8	
SCB14L-A2		DC	14	14.7	136	91	169	4.5	0.8	1.4	190	8	With Sensor
SCB14L-B2		DC	14	14.7	136	91	169	4.5	0.8	1.4	190	8	With Sensor
CB16-A		DC	19	20.0	176	101	157	6.4	1.2	1.9	240	5	
CB16-B		DC/CP	19	20.0	176	101	157	6.4	1.2	1.9	240	5	
CB16B-A		DC	16	16.8	160	90	161	5.1	1.0	1.6	207	4	
CB16AL-A2		DC/CP	16	16.8	207	71.5	164	4.9	1.1	1.6	200	2	
CB16CL-B		DC	19	20.0	176	101	177	6.5	1.2	1.9	240	8	
CB16L-A		DC	19	20.0	176	101	157	6.4	1.2	1.9	240	5	

* CCA (ток холодной прокрутки) теоретически рассчитанная величина, данная для справки.

DC = сухозаряженная батарея (1 батарея без электролита)
CP = сухозаряженная батарея в упаковке 2-в-1 (1 батарея в комплекте с упаковкой электролита)
WC = залитая заряженная батарея (1 залитая заряженная батарея)

СПЕЦИФИКАЦИИ

HEAVY DUTY продолжение

Модель	Прим.	Тип	Емкость Ач (10ч)	Емкость Ач (20ч)	Габариты мм Д	Ш	В	Вес с электролитом, (кг)	Объем кислоты (литры)	Заряд-ный ток (А)	Ток CCA*, (A) -18°C	Тип клемм	Расположение клемм
CB16L-B		DC/CP	19	20.0	176	101	157	6.4	1.2	1.9	240	5	
HCB16A-A		DC	16	16.8	149	91	182	5.0	0.8	1.6	190	2	
SCB16L-B		DC	19	20.0	176	101	157	6.4	1.2	1.9	240	5	With Sensor
CB18-A		DC	18	18.9	179	91	166	6.0	1.2	1.8	235	7	
CB18L-A		DC	18	18.9	179	91	166	6.0	1.2	1.8	235	7	
CB18L-A2		DC	18	18.9	179	91	166	6.0	1.2	1.8	235	7	
C50-N18L-A		DC	20	21.1	205	90	162	7.4	1.4	2.0	240	7	
C50-N18L-A2		DC	20	21.1	205	90	162	7.4	1.4	2.0	240	7	
C50-N18L-A3		DC/CP	20	21.1	206	91	164	6.6	1.1	2.0	260	8	
SC50-N18L-AT		DC	20	21.1	206	91	164	6.6	1.1	2.0	260	8	With Sensor
C60-N24-A		DC	28	29.5	184	124	175	8.6	1.7	2.8	241	3	
C60-N24L-A	(i)	DC	28	29.5	184	125	158	8.1	1.7	2.8	300	3	
C60-N24L-A2	(i)	DC	28	29.5	184	125	158	8.1	1.7	2.8	300	3	
51814	* *	DC	-	18.0	186	82	171	5.6	1.0	1.9	100	12	
51913	* *	DC	-	19.0	186	82	171	5.6	1.0	1.9	100	12	
52015	* *	DC	-	20.0	186	82	171	5.6	1.0	2.0	110	12	
52515	* *	DC	-	25.0	186	130	171	8.4	1.8	2.5	130	12	
53030	* *	DC	-	30.0	186	130	171	9.4	1.6	3.0	180	12	

CONVENTIONAL 12В

Модель	Прим.	Тип	Емкость Ач (10ч)	Емкость Ач (20ч)	Габариты мм Д	Ш	В	Вес с электролитом, (кг)	Объем кислоты (литры)	Заряд-ный ток (А)	Ток CCA*, (A) -18°C	Тип клемм	Расположение клемм
12N4-3B		DC	4	4.2	121	71	94	1.7	0.27	0.4	45	8	
12N5-3B		DC/CP	5	5.3	121	62	132	2.2	0.38	0.5	39	10	
12N5-4B		DC	5	5.3	121	62	132	2.2	0.38	0.5	39	10	
12N5.5-3B		DC/CP	5.5	5.8	136	61	132	2.3	0.42	0.6	55	10	
12N5.5-4A		DC/CP	5.5	5.8	136	61	132	2.3	0.42	0.6	55	10	
12N5.5-4B		DC	5.5	5.8	136	61	132	2.3	0.42	0.6	55	10	
12N5.5A-3B		DC	5.5	5.8	104	91	116	2.2	0.38	0.6	55	5	
12N7-3B		DC/CP	7	7.4	137	76	136	2.8	0.55	0.7	80	5	
12N7-4A		DC	7	7.4	137	76	136	2.8	0.55	0.7	80	5	
12N7-4B		DC	7	7.4	137	76	136	2.8	0.55	0.7	80	5	
12N7A-3A		DC	7	7.4	151	61	132	2.7	0.55	0.7	80	6	
12N7D-3B		DC	7	7.4	137	76	151	2.8	0.55	0.7	80	6	
12N9-3A	(ii)	DC	9	9.5	137	76	141	2.9	0.6	0.9	85	9	
12N9-3A-1		DC/CP	9	9.5	137	76	141	2.9	0.6	0.9	85	5	
12N9-3B		DC/CP	9	9.5	137	76	141	2.9	0.6	0.9	85	5	
12N9-4B	(ii)	DC	9	9.5	137	76	141	2.9	0.6	0.9	85	9	
12N9-4B-1		DC/CP	9	9.5	137	76	141	2.9	0.6	0.9	85	5	
12N10-3A-1		DC	10	10.5	136	91	147	3.8	0.78	1.0	103	5	
12N10-3B		DC	10	10.5	136	91	147	3.8	0.78	1.0	103	5	
12N10-3B-1		DC	10	10.5	136	91	147	3.8	0.78	1.0	103	5	
12N11-3A-1		DC	11	11.6	136	91	156	2.7	0.76	1.1	109	4	
12N11-3B		DC	11	11.6	135	90	155	3.6	0.8	1.1	128	5	
12N12A-4A-1		DC/CP	12	12.6	136	81	162	4.2	0.72	1.2	125	5	
12N14-3A		DC	14	14.7	136	91	169	4.8	0.78	1.4	128	4	
12N14-3B		DC	14	14.7	136	91	169	4.8	0.78	1.4	128	4	
12N16-3B		DC	16	16.8	176	101	157	5.6	1.19	1.6	190	5	
12N18-3		DC	18	18.9	205	90	162	6.5	1.3	1.8	140	6	

(i) Общая высота с клеммами 175 мм
(ii) Общая длина с клеммами 167 мм
* CCA (ток холодной прокрутки) рассчитанная величина по стандарту DIN и дана только для справки.
** CCA (ток холодной прокрутки) рассчитанная величина по стандарту DIN и дана только для справки

DC = сухозаряженная батарея (1 батарея без электролита)
CP = сухозаряженная батарея в упаковке 2-в-1 (1 батарея в комплекте с упаковкой электролита)
WC = залитая заряженная батарея (1 залитая заряженная батарея)

CONVENTIONAL 12В продолжение

Модель	Прим.	Тип	Емкость Ач (10ч)	Емкость Ач (20ч)	Габариты мм Д	Ш	В	Вес с электролитом, (кг)	Объем кислоты (литры)	Заряд-ный ток (А)	Ток CCA*, (А) -18°C	Тип клемм	Расположение клемм
12N18-3A		DC	18	18.9	182	91	166	6.0	1.19	1.6	235	8	
12N24-3A	(i)	DC	24	25.3	184	125	158	7.5	1.65	2.4	190	3	
CHD4 -12	(ii)	DC	30	31.6	202	131	165	9.2	1.80	3.0	240	9	

CONVENTIONAL 6В

Модель	Прим.	Тип	Емкость Ач (10ч)	Емкость Ач (20ч)	Габариты мм Д	Ш	В	Вес с электролитом, (кг)	Объем кислоты (литры)	Заряд-ный ток (А)	Ток CCA*, (А) -18°C	Тип клемм	Расположение клемм
6N2-2A		DC	2	2.1	70	47	97	0.3	0.12	0.2		–	
6N2-2A-2		DC	2	2.1	70	47	97	0.3	0.12	0.2		–	
6N2-2A-3		DC	2	2.1	70	47	97	0.3	0.12	0.2		–	
6N2-2A-4		DC	2	2.1	70	47	97	0.3	0.12	0.2		–	
6N2-2A-7		DC	2	2.1	70	47	97	0.3	0.12	0.2		–	
6N2-2A-8		DC	2	2.1	70	47	97	0.3	0.12	0.2		–	
6N2-2D		DC	2	2.1	71	47	101	0.3	0.12	0.2		–	
6N2A-2C		DC	2	2.1	71	48	108	0.3	0.12	0.2		–	
6N2A-2C-3		DC	2	2.1	71	48	108	0.3	0.12	0.2		–	
6N4-2A		DC	4	4.2	71	71	97	0.8	0.2	0.4		–	
6N4-2A-2		DC	4	4.2	71	71	97	0.8	0.2	0.4		–	
6N4-2A-3		DC	4	4.2	71	71	97	0.8	0.2	0.4		–	
6N4-2A-4		DC/CP	4	4.2	71	71	97	0.8	0.2	0.4		–	
6N4-2A-5		DC	4	4.2	71	71	97	0.8	0.2	0.4		–	
6N4-2A-6		DC	4	4.2	71	71	97	0.8	0.2	0.4		–	
6N4-2A-7		DC	4	4.2	71	71	97	0.8	0.2	0.4		–	
6N4-2A-8		DC	4	4.2	71	71	97	0.8	0.2	0.4		–	
6N4A-4D		DC	4	4.2	61	57	131	1.0	0.2	0.4		–	
6N4B-2A		DC	4	4.2	102	48	95	0.9	0.18	0.4		–	
6N4B-2A-1		DC	4	4.2	102	48	95	0.9	0.18	0.4		–	
6N4B-2A-3		DC	4	4.2	102	48	95	0.9	0.18	0.4		–	
6N4B-2A-4		DC	4	4.2	102	48	95	0.9	0.18	0.4		–	
6N4B-2A-5		DC	4	4.2	102	48	95	0.9	0.18	0.4		–	
6N4C-1B		DC	4	4.2	69	70	106	0.9	0.18	0.4		–	
6N5.5-1D		DC	5.5	5.8	91	71	101	1.1	0.25	0.6		–	
6N6-1C		DC	6	6.3	99	58	108	1.3	0.25	0.6		–	
6N6-1D-2		DC	6	6.3	99	57	111	1.2	0.3	0.6		–	
6N6-3B	(iii)	DC	6	6.3	99	57	111	1.2	0.27	0.6		5	
6N6-3B-1		DC/CP	6	6.3	99	57	112	1.2	0.27	0.6		5	
6N8-3B		DC	8	8.4	121	71	97	1.2	0.27	0.6		5	
6N11-2D		DC	11	11.6	151	71	100	1.5	0.42	1.1		6	
6N11A-1B		DC	11	11.6	121	61	132	1.5	0.42	1.1		5	
6N11A-3A		DC/CP	11	11.6	121	61	132	1.5	0.42	1.1		5	
6N11A-4A		DC	11	11.6	121	61	132	1.5	0.42	1.1		5	
6N12A-2C		DC	12	12.6	156	57	118	2.4	0.42	1.2		6	
6N12A-2D		DC	12	12.6	156	57	118	2.4	0.42	1.2		6	
B38-6A		DC	18	18.9	120	83	165	3.4	0.55	1.8		5	
B39-6		DC	7	7.4	128	51	125	1.5	0.27	0.7		5	
B49-6		DC	12	12.6	91	83	162	2.2	0.42	1.2		5	

(i) Общая высота с клеммами 173 мм
(ii) Общая длина с клеммами 245 мм
(iii) Общая высота с клеммами 120 мм

DC = сухозаряженная батарея (1 батарея без электролита)
CP = сухозаряженная батарея в упаковке 2-в-1 (1 батарея в комплекте с упаковкой электролита)
WC = залитая заряженная батарея (1 залитая заряженная батарея)

КОНФИГУРАЦИЯ КЛЕММ

Форма клемм может варьироваться в зависимости от модели аккумулятора. При подборе аккумулятора для замены из этого каталога, вы можете быть уверены в правильности конфигурации клемм. При подборе аккумулятора без каталога, обратитесь к таблице для определения и сопоставления типа клемм.

Тип клемм	Форма клемм			Модель батареи				
	Вид спереди	Вид сбоку	Вид сверху					
1				GTX16-BS-1	CB14L-A1			
2				HCB16A-A	CB16AL-A2			
3				12N24-3A CB7C-A	C60-N24-A	C60-N24L-A	C60-24L-A2	
4				12N14-3A CB10A-A2	12N14-3B CB12B-B2	12N11-3A-1 CB16B-A		
5				6N6-3B 6N11A-4A 12N7-3B 12N9-4B-1 12N12A-4A-1 CB9-B CB10L-BP CB14A-A1 SCB16L-B	6N6-3B-1 B38-6A 12N7-4A 12N10-3A-1 12N16-3B CB9L-B CB12A-A CB16L-A	6N8-3B B39-6 12N7-4B 12N10-3B CB7-A CB9A-A CB12AL-A CB16L-B	6N11A-1B B49-6 12N9-3A-1 12N10-3B-1 CB7L-B CB10A-A CB14A-A CB16-A	6N11A-3A 12N5.5A-3B 12N9-3B 12N11-3B CB9-A CB10L-B SCB12A-A CB16-B
6				CB3L-A 6N11-2D 12N7A-3A	CB3L-B 6N12A-2C 12N7D-3B	CB12A-B 6N12A-2D 12N18-3		
7				CB18-A C50-N18L-A	CB18L-A C50-N18L-A2	CB18L-A2		
8				12N4-3B CB7L-B2 CB10L-B2 CB14-B2 CB14A-A2 GTX4L-BS GTX12-BS GT16-BS GT16L-BS GTX20HL-BS	12N18-3A CB9L-A2 CB12A-B2 CB14L-A2 CB16CL-B GTX5L-BS GTX14-BS GTX20-BS GTX18L-BS GTX24HL-BS	CB4L-A CB9L-B2 CB12AL-A2 CB14L-B2 C50-N18L-A3 GTX7L-BS GTX14L-BS GTX20L-BS GTX16-BS YTZ7S	CB4L-B CB10L-A2 CB12C-A SCB14L-A2 SC50-N18L-AT GTX7A-BS GTX14A-BS GTX14AH-BS GIX30L-BS	CB7-B2 SCB10L-A2 CB14-A2 SCB14L-B2 GT4L-BS GTX9-BS GTX14AL-BS GTX14AHL-BS GTX20H-BS
9				CHD4 -12	12N9-3A	12N9-4B		
10				12N5-3B CB5L-B	12N5-4B	12N5.5-3B	12N5.5-4A	12N5.5-4B
11				GT7B-BS GT7B-4 YTZ10S	GT9B-BS GT9B-4 YTZ12S	GT12A-BS GT12B-4 YTZ14S	GT12B-BS GT14B-4	GT14B-BS
12				51814 52015	51913 52515	53030 GT19BL-BS		
13				GTR4A-BS				
14				GT4B-BS				
15				GTX14H-BS	GTX20CH-BS			

ТАБЛИЦА ВЗАИМОЗАМЕНЯЕМОСТИ БАТАРЕЙ

High Performance AGM	Maintenance Free AGM	Heavy Duty	Conventional
-	GTX4L-BS	CB4L-B, CB4L-A	-
-	-	CB5L-B	12N5-3B
-	-	CB7L-B	12N7-3B
-	-	CB7-A	12N7-4A
-	-	CB9-B	12N9-4B-1
-	-	CB9L-B	12N9-3B
-	-	CB9L-A2	12N9-3A-1
-	-	CB10L-B	12N10-3B
-	-	CB12A-A	12N12A-4A-1
GT7B-4	GT7B-BS	-	-
GT9B-4	GT9B-BS	-	-
GT12B-4	GT12B-BS	-	-
GT14B-4	GT14B-BS	-	-
GTX14H-BS	GTX14-BS	-	-
-	GTX14AH-BS	CB14A-2	-
-	GTX14AH-BS	CB14A-A2	-
-	GTX14AHL-BS	CB14L-A2	12N14-3A
-	GT16-BS	CB16-B	-
-	GT16L-BS	-	12N16-3B
-	GT16L-BS	CB16L-B	-
GTX20CH-BS	GTX16-BS	-	-
-	GTX18L-BS	C50-N18L-A3	-
-	GTX18L-BS (i)	SC50-N18L-AT	-
-	GTX20-BS	CB18-A	-
GTX20H-BS (ii)	GTX20-BS (ii)	-	-
GTX20HL-BS (ii)	GTX20L-BS (ii)	CB18L-A	-
GTX24HL-BS (iii)	-	C50-N18L-A	-
GTX24HL-BS	-	C50-N18L-A3	-
GTX24HL-BS (iii)	-	SC50-N18L-AT	-
GIX30L-BS	-	53030	-

(i) Монтируются только передние и верхние клеммы. Устраняет необходимость в датчике (необходимо отключить датчик)
(ii) Батареи серии GTX20 могут быть использованы в качестве замены, однако при этом могут потребоваться некоторые дополнительные модификации крепления. См. маркировку батареи на предмет возможных ограничений по модификации.
(iii) Монтируются только передние и верхние клеммы. Устраняет необходимость в датчике при установке вместо SC50-N18L-AT (необходимо отключить датчик).

Маркировка мотоаккумуляторов GS

Пример:

6 N 2 - 2 A - 8
12 N 12 A - 4 A - 1
a b c d e f g

CB 16 A L - A 2
h j d e f g

C 50 - N 18 L - A
h j b i e f

GT X 20 H L - B S
k m i m e l

YT Z 10 S
GT X 7 L - B S
k m i e l

Обозначения:

a – номинальное напряжение
b – вентилируемый тип (нормальный тип)
c – емкость батареи (10ч)
d – обозначение уникальности размера при одинаковой емкости
e – Полярность (расположение клемм), см. рис.1.
f – Расположение газоотводов, см. рис. 2.
g – тип клемм
h – обозначение POLYMION
i – класс производительности
j – стартерная/ пусковая мощность
k – обозначение VLRA батарей (GT)
l – электролит в комплекте
m – высокая производительность

Рис.1 e Полярность (L обозначает, что отрицательная клемма находится слева)

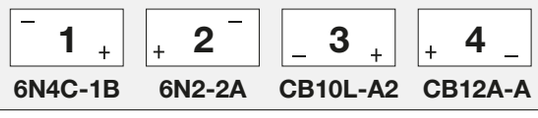

Рис.2 f Расположение газоотвода

Максимум мощности
Минимум пространства

БЕСПРЕЦЕДЕНТНО МОЩНЫЕ БАТАРЕИ ИЗ ЯПОНИИ!

Батареи серии YTZ с увеличенным счетом сборки пластин дают любителям мотоспорта всё то, в чём они действительно нуждаются:

- ✓ Улучшенные показатели стартерной мощности,
- ✓ Увеличенный срок службы,
- ✓ Превосходную надежность,
- ✓ Максимальную производительность!

Батареи GS YTZ, несмотря на более компактный размер и вес работают намного эффективнее и обеспечивают высокий пусковой ток. Батареи залиты и активированы на заводе, полностью герметичные (непроливаемые), что позволяет устанавливать их под разными углами; не требуют доливки и обслуживания в течение всего срока службы аккумулятора.

Полностью герметичный корпус
Защищает от утечки и коррозии и обеспечивает дополнительную прочность и долговечность.

Специальная активная масса
Обеспечивает устойчивость к вибрации и надежную пусковую мощность тогда, когда это необходимо, продлевает срок службы батареи при хранении.

Увеличенное количество пластин
Увеличенный счет сборки обеспечивает максимальную мощность и виброустойчивость.

AGM сепараторы
Сепараторы из стекловолокна абсорбируют электролит и обеспечивают полную герметичность (непроливаемость) батареи. За счет технологии VRLA (регулируемый клапан для рекомбинации газов) исчезает необходимость доливки воды в течение всего срока службы батареи.

Полипропиленовый корпус (PP) и крышка
Высокостойкий и ударопрочный корпус из PP материала не боится контакта с топливом и моторным маслом, а также надежно защищает батарею от вибрации и механических воздействий при эксплуатации в экстремальных условиях.

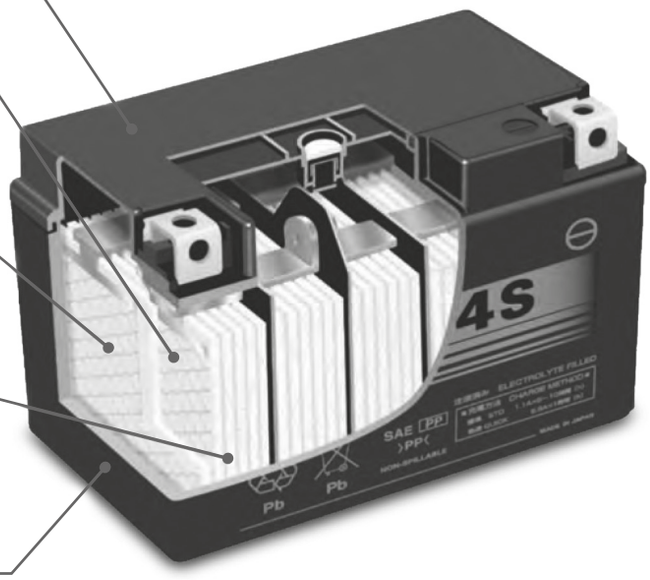

Модель	Тип	Емкость Ач (10ч)	Емкость Ач (20ч)	Габариты мм			Вес с электро-литом, (кг)	Объем кислоты (литры)	Заряд-ный ток (А)	Ток CCA*, (А) -18 °C	Тип клемм см. стр.10	Расположение клемм
				Д	Ш	В						
YTZ7S	WC	6	6.3	113	70	105	2.1	—	0.6	130	5	
YTZ10S	WC	8.6	9.1	150	87	93	3.2	—	0.9	190	11	
YTZ12S	WC	11	11.6	150	87	110	3.7	—	1.1	210	11	
YTZ14S	WC	11.2	11.8	150	87	110	3.9	—	1.1	230	11	

YTZ-Установка под углом

Благодаря уникальному герметичному дизайну, аккумулятор можно устанавливать под разными углами как указано на рисунке ниже.

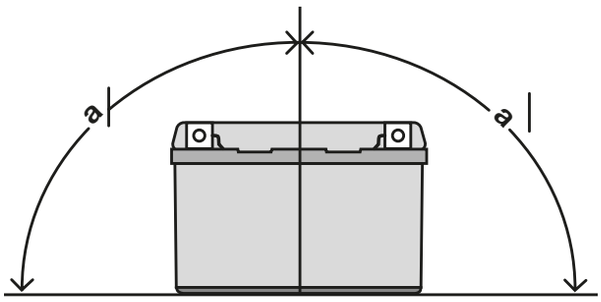

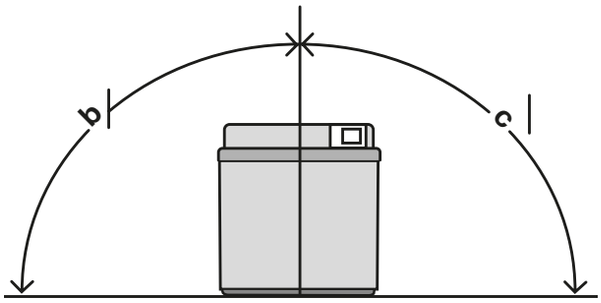

Серия YTZ	Угол установки		
	a°	b°	c°
YTZ7S	40	90	15
YTZ10S	40	90	15
YTZ12S	40	90	15
YTZ14S	40	90	15

TTZ-Установка под углом

TTZ – не могут быть установлены под тем же углом, что YTZ- батареи. Углы наклона для этой серии ограничены; смотри рисунок ниже.

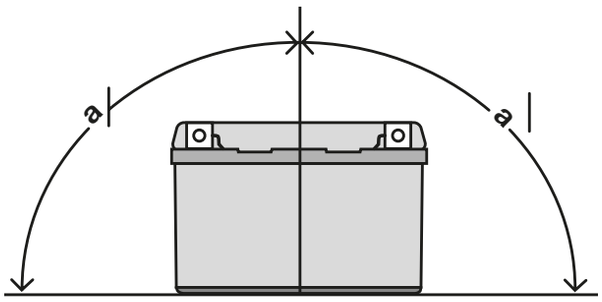

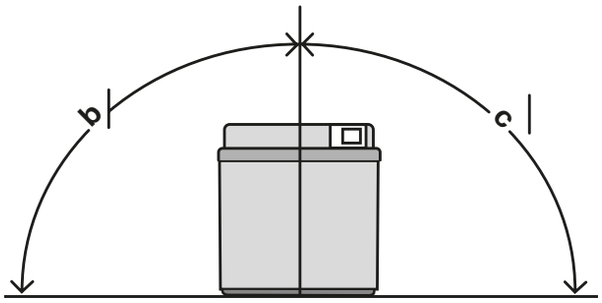

Серия TTZ	Угол установки		
	a°	b°	c°
TTZ7S	30	20	20
TTZ10S	30	20	20
TTZ12S	30	20	20
TTZ14S	30	20	20

Примечание:
- рассматриваются допустимые углы отклонения относительно центральной оси батареи;
- указанные выше углы оценены с учетом фактора вертикальной вибрации;
- WC - залитая батарея (1 залитая и заряженная батарея).

МОЩНАЯ И ВЫСОКОПРОИЗВОДИТЕЛЬНАЯ ЛИНЕЙКА ОТ GS

ТАБЛИЦА ВЗАИМОЗАМЕНЯЕМОСТИ БАТАРЕЙ GS И YUASA

GS	Yuasa
HIGH PERFORMANCE PREMIUM AGM	
YTZ7S	YTZ7S
YTZ10S	YTZ10S
YTZ12S	YTZ12S
YTZ14S	YTZ14S
HIGH PERFORMANCE AGM	
GT7B-4	YT7B-BS
GT9B-4	YT9B-BS
GT12B-4	YT12B-BS
GT14B-4	YT14B-BS
GTX14H-BS	YTX14H-BS
GTX20CH-BS	YTX20CH-BS
GTX20H-BS	YTX20H-BS
GTX20HL-BS	YTX20HL-BS
GTX24HL-BS	YTX24HL-BS
GIX30L-BS	YIX30L-BS
MAINTENANCE FREE AGM	
GT4B-BS	YT4B-BS
GTR4A-BS	YTR4A-BS
GT4L-BS	YT4L-BS
GTX4L-BS	YTX4L-BS
GTX5L-BS	YTX5L-BS
GT7B-BS	YT7B-BS
GTX7A-BS	YTX7A-BS
GTX7L-BS	YTX7L-BS
GT9B-BS	YT9B-BS
GTX9-BS	YTX9-BS
GT12A-BS	YT12A-BS
GT12B-BS	YT12B-BS
GTX12-BS	YTX12-BS
GT14B-BS	YT14B-BS
GTX14-BS	YTX14-BS
GTX14A-BS	YTX14AH-BS
GTX14AL-BS	YTX14AHL-BS
GTX14AH-BS	-
GTX14AHL-BS	-
GTX14L-BS	YTX14L-BS
GT16L-BS	-
GTX16-BS	YTX16-BS
GTX16-BS-1	YTX16-BS-1
GTX18L-BS	-
GT19BL-BS	YT19BL-BS
GTX20-BS	YTX20-BS
GTX20L-BS	YTX20L-BS
HEAVY DUTY	
CB2.5L-C	YB2.5L-C
CB2.5L-C-1	YB2.5L-C-1

GS	Yuasa
HEAVY DUTY продолжение	
CB2.5L-C-2	YB2.5L-C-2
CB3L-A	YB3L-A
CB3L-B	YB3L-B
CB4L-A	YB4L-A
CB4L-B	YB4L-B
CB5L-B	YB5L-B
CB7-A	YB7-A
CB7-B2	-
CB7C-A	YB7C-A
CB7L-B	YB7L-B
CB7L-B2	YB7L-B2
CB9-A	-
CB9-B	YB9-B
CB9A-A	YB9A-A
CB9L-A2	YB9L-A2
CB9L-B	YB9L-B
CB9L-B2	-
CB10A-A	-
CB10A-A2	YB10A-A2
CB10L-A2	YB10L-A2
CB10L-B	YB10L-B
CB10L-B2	YB10L-B2
CB10L-BP	YB10L-BP
SCB10L-A2	-
CB12A-A	YB12A-A
CB12A-B	YB12A-B
CB12A-B2	-
CB12AL-A	YB12AL-A
CB12AL-A2	YB12AL-A2
CB12B-B2	YB12B-B2
CB12C-A	YB12C-A
SCB12A-A	-
CB14-A2	YB14-A2
CB14-B2	YB14-B2
CB14A-A	-
CB14A-A1	YB14A-A1
CB14A-A2	YB14A-A2
CB14L-A1	YB14L-A1
CB14L-A2	YB14L-A2
CB14L-B2	YB14L-B2
SCB14L-A2	SYB14L-A2
SCB14L-B2	SYB14L-B2
CB16-A	-
CB16-B	YB16-B
CB16B-A	YB16B-A
CB16AL-A2	YB16AL-A2
CB16CL-B	YB16CL-B

ТАБЛИЦА ВЗАИМОЗАМЕНЯЕМОСТИ БАТАРЕЙ GS И YUASA

GS	Yuasa
HEAVY DUTY продолжение	
CB16L-A	-
CB16L-B	YB16L-B
HCB16A-A	HYB16A-AB
SCB16L-B	-
CB18-A	YB18-A
CB18L-A	YB18L-A
CB18L-A2	-
C50-N18L-A	Y50-N18L-A
C50-N18L-A2	Y50-N18L-A2
C50-N18L-A3	Y50-N18L-A3
SC50-N18L-AT	SY50-N18L-AT
C60-N24-A	Y60-N24-A
C60-N24L-A	Y60-N24L-A
C60-N24L-A2	-
51814	51814
51913	51913
52015	52015
52515	52515
53030	53030
CONVENTIONAL 12 Вольт	
12N4-3B	-
12N5-3B	12N5-3B
12N5-4B	12N5-4B
12N5.5-3B	12N5.5-3B
12N5.5-4A	12N5.5-4A
12N5.5-4B	12N5.5-4B
12N5.5A-3B	12N5.5A-3B
12N7-3B	12N7-3B
12N7-4A	12N7-4A
12N7-4B	12N7-4B
12N7A-3A	-
12N7D-3B	12N7D-3B
12N9-3A	12N9-3A
12N9-3A-1	-
12N9-3B	12N9-3B
12N9-4B	-
12N9-4B-1	12N9-4B-1
12N10-3A-1	-
12N10-3B	12N10-3B
12N10-3B-1	-
12N12A-4A-1	12N12A-4A-1
12N11-3A-1	12N11-3A-1
12N11-3B	12N11-3B
12N14-3A	12N14-3A
12N14-3B	-

GS	Yuasa
CONVENTIONAL 12 Вольт продолжение	
12N16-3B	-
12N18-3	12N18-3
12N18-3A	-
12N24-3A	12N24-3A
CHD4-12	YHD-12H
CONVENTIONAL 6 Вольт	
6N2-2A	6N2-2A
6N2-2A-2	-
6N2-2A-3	6N2-2A-3
6N2-2A-4	6N2-2A-4
6N2-2A-7	-
6N2-2A-8	6N2-2A-8
6N2-2D	-
6N2A-2C	6N2A-2C
6N2A-2C-3	6N2A-2C-3
6N4-2A	6N4-2A
6N4-2A-2	6N4-2A-2
6N4-2A-3	6N4-2A-3
6N4-2A-4	6N4-2A-4
6N4-2A-5	6N4-2A-5
6N4-2A-6	-
6N4-2A-7	6N4-2A-7
6N4-2A-8	6N4-2A-8
6N4A-4D	6N4A-4D
6N4B-2A	6N4B-2A
6N4B-2A-1	-
6N4B-2A-3	6N4B-2A-3
6N4B-2A-4	6N4B-2A-4
6N4B-2A-5	6N4B-2A-5
6N-4C-1B	6N-4C-1B
6N5.5-1D	6N5.5-1D
6N6-1C	-
6N6-1D-2	6N6-1D-2
6N6-3B	6N6-3B
6N6-3B-1	6N6-3B-1
6N8-3B	-
6N11-2D	6N11-2D
6N11A-1B	6N11A-1B
6N11A-3A	6N11A-3A
6N11A-4A	6N11A-4A
6N12A-2C	6N12A-2C
6N12A-2D	6N12A-2D
B38-6A	B38-6A
B39-6	B39-6
B49-6	B49-6

Объем	Модель	Год	High Performance AGM / Premium AGM	Maintenance Free	Heavy Duty	Conventional
AERMACCHI						
125	SX	-	-	-	-	12N7-3B
175	SX	-	-	-	-	12N7-3B
250	Ala Azzurra/Bianca	-	-	-	-	6N11A-1B
250	Ala Oro/Rossa/Verde	-	-	-	-	6N11A-1B
250	Chimera	-	-	-	-	B39-6
250	SX	-	-	-	-	12N7-3B
350	Ala Azzurra/Bianca	-	-	-	-	6N11A-1B
350	Ala Oro/Rossa/Verde	-	-	-	-	6N11A-1B
APRILIA						
50	AF-1 Futura/Europa	87-94	-	-	CB4L-B	-
50	Amico GL/LK/LX/Sport	92-97	-	-	CB4L-B	-
50	AREA 51	00	-	-	CB4L-B	-
50	Classic 50	-97	-	-	CB4L-B	-
50	ET	-	-	-	CB4L-B	-
50	Gulliver AC/LC	-97	-	-	CB4L-B	-
50	H2O	00-	-	-	CB4L-B	-
50	Habana, Custom	99	-	-	CB4L-B	-
50	LC	-	-	-	CB4L-B	-
50	Mc Gulliver	00	-	-	CB4L-B	-
50	Mojito	-	-	-	CB4L-B	-
50	Mojito 25 KM/H FL	-	-	-	CB4L-B	-
50	Mojito FL	-	-	-	CB4L-B	-
50	MX50	-	-	-	CB4L-B	-
50	Pegaso	00-	-	-	CB4L-B	-
50	Rally	04-05	-	-	CB4L-B	-
50	Rally AC/LC	-97	-	-	CB4L-B	-
50	Red Rose/Classic	-97	-	-	CB4L-B	-
50	Replica	00-	-	-	CB4L-B	-
50	RS50	00-05	-	-	CB4L-B	-
50	RS50/Extrema	-97	-	-	CB4L-B	-
50	RX-50	-93	-	-	CB4L-B	-
50	Scarabeo 2T	97-	-	-	CB4L-B	-
50	Scarabeo 4T	03-	-	-	CB9-B	-
50	Scarabeo 50	00-03	-	-	CB4L-B	-
50	Scarabeo 50 Street	13-	-	-	CB4L-B	-
50	Scarabeo eu	-	-	-	CB9-B	-
50	Scarabeo Diech	02-	-	GTX5L-BS	-	-
50	Sonic	00-	-	-	CB4L-B	-
50	Sonic, GP	99	-	-	CB4L-B	-
50	Sonic Acqua	-	-	-	CB4L-B	-
50	SR CARB	08	-	-	CB9-B	-
50	SR Ditech	01-	-	GTX5L-BS	-	-
50	SR IE	08	-	-	CB9-B	-
50	SR IE 25 KM/H	-	-	-	CB9-B	-
50	SR IE CND	-	-	-	CB9-B	-
50	SR IE USA	-	-	-	CB9-B	-
50	SR LC/Netscaper	-97	-	-	CB4L-B	-
50	SR Netscaper	00-	-	-	CB4L-B	-
50	SR Replica/Racing	-97	-	-	CB4L-B	-
50	SR Stealth/WWW	-97	-	-	CB4L-B	-
50	SR Urban/Viper	-	-	-	CB4L-B	-
50	SR50	00-01	-	-	CB4L-B	-
50	SR 50 de	-	-	-	CB4L-B	-
50	SR50 Ditech	01-05	-	GTX5L-BS	-	-
50	Tuareg Rally/Wind	-97	-	-	CB4L-B	-
100	Scarabeo 2T	00	-	GTX5L-BS	-	-
100	Scarabeo 4T	00-	-	-	CB9-B	-
100	Scarabeo 4T USA	-	-	-	CB9-B	-
125	AF-1 Futura/Europa	-94	-	-	CB9-B	-

Объем	Модель	Год	High Performance AGM / Premium AGM	Maintenance Free	Heavy Duty	Conventional
APRILIA продолжение						
125	AF-1 Project108/Replica	-94	-	-	CB9-B	-
125	AF-1 Sintesi/Sport Pro	-94	-	-	CB9-B	-
125	AS R	-	-	-	-	12N5-3B
125	Atlantic	-	-	-	CB12AL-A	-
125	Classic	-	-	-	CB9-B	-
125	ETX (Electric-Starter)	-	-	-	CB9-B	-
125	ETX (Kick Starter)	-	-	-	-	12N5.5-3B
125	Habana, Custome	-	-	GTX9-BS	-	-
125	Leonardo	96-01	-	-	CB12AL-A	-
125	Mojito	-	-	GTX7L-BS	-	-
125	Mojito FL	-	-	GTX7L-BS	-	-
125	MX 125	-	-	-	CB4L-B	-
125	Pegaso	-95	-	-	CB9-B	-
125	Rambla	08	-	GTX12-BS	-	-
125	Red Rose/Classic	-97	-	-	CB9-B	-
125	RS Extrema, RX	-97	-	-	CB9-B	-
125	RS Replica	-93	-	-	CB9-B	-
125	RS125	95-	-	-	CB9-B	-
125	RS 125 11 KW	-	-	-	CB9-B	-
125	RS 125 F.P.	-	-	-	CB9-B	-
125	RS 125 F.P. USA	-	-	-	CB9-B	-
125	RX 125 11 KW	-	-	-	CB4L-B	-
125	RX 125 F.P.	-	-	-	CB4L-B	-
125	Scarabeo	99-07	-	-	CB12AL-A	-
125	Scarabeo	08-12	-	GTX12-BS	-	-
125	Scarabeo	13-	-	-	CB12AL-A	-
125	Sport city	08-12	-	GT12B-BS	-	-
125	Sport city rest	-	-	GTX12-BS	-	-
125	SR125	99	-	GTX7L-BS	-	-
125	SR MAX 125	13-	-	GTX12-BS	-	-
125	ST, STX (Electric-Starter)	-	-	-	CB9-B	-
125	ST, STX (Kick Starter)	-	-	-	-	12N5.5-3B
125	ST/STX/ETX	-	-	-	-	12N5.5-3B
125	SX 11 KW	-	-	-	CB4L-B	-
125	SX F.P.	-	-	-	CB4L-B	-
125	Tuareg (Electric-Starter)	-	-	-	CB9-B	-
125	Tuareg (Kick Starter)	-	-	-	-	12N5.5-3B
125	Tuareg Rally	-86	-	-	-	6N4-2A-4
125	Tuareg Rally	87	-	-	CB2.5L-C-2	-
125	Tuareg Rally/Wind	87-94	-	-	CB9-B	-
125	Tuono	-	-	-	CB9-B	-
150	Leonardo	99-02	-	-	CB12AL-A	-
150	Mojito	-	-	GTX7L-BS	-	-
150	Scarabeo	99-	-	-	CB12AL-A	-
150	SR 150	00	-	GTX7L-BS	-	-
200	Atlantic	-	-	-	CB12AL-A	-
200	Scarabeo	00-	-	-	CB12AL-A	-
200	Sport city	-	-	GT12B-BS	-	-
200	Sport city	09-	-	GTX12-BS	-	-
200	Sport city rest	-	-	GTX12-BS	-	-
250	Atlantic	-	-	-	CB12AL-A	-
250	ETX (Electric-Starter)	-	-	-	-	12N14-3A
250	ETX (Kick-Starter)	-	-	-	-	12N5.5-3B
250	Leonardo, ST SP	99-	-	-	CB12AL-A	-
250	Rambla	-	-	GTX12-BS	-	-
250	RS Replica	-	-	-	CB4L-B	-
250	RS 250	95-04	-	-	CB4L-B	-
250	Scarabeo	-08	-	-	CB12AL-A	-
250	Scarabeo	08-	-	GTX12-BS	-	-
250	Scarabeo L	-	-	GTX12-BS	-	-

Объем	Модель	Год	High Performance AGM / Premium AGM	Maintenance Free	Heavy Duty	Conventional
APRILIA продолжение						
250	Sport city	09-12	-	GTX12-BS	-	-
250	Sport city rest	-	-	GTX12-BS	-	-
300	Scarabeo 300 S	13-	-	GTX12-BS	-	-
250	Sport city USA	-	-	GTX12-BS	-	-
250	Sport city USA rest	-	-	GTX12-BS	-	-
300	Atlanic	12-	-	-	CB12AL-A	-
300	Leonardo	-	-	-	CB12AL-A	-
300	Sport city rest	-	-	GTX12-BS	-	-
350	ETX (Electric-Starter)	-	-	-	CB14L-A2	-
350	ETX (Kick-Starter)	-	-	-	-	12N5.5-3B
350	Tuareg Wind	87-88	-	-	CB14L-A2	-
350	Tuareg Wind	88-94	-	-	CB9-B	-
400	Atlantic	-	-	GTX12-BS	-	-
400	Scarabeo	-	-	GTX12-BS	-	-
400	Scarabeo L	-	-	GTX12-BS	-	-
450	Enduro	-	-	GTX7A-BS	-	-
450	Motard	-	-	GTX7A-BS	-	-
450	MXV	-	-	GTX7A-BS	-	-
450	RXV 450	-	-	GTX7A-BS	-	-
450	RXV 450 CND	-	-	GTX7A-BS	-	-
450	RXV 450 USA	-	-	GTX7A-BS	-	-
450	SXV 450	-	-	GTX7A-BS	-	-
450	SXV 450 CND	-	-	GTX7A-BS	-	-
450	SXV 450 US	-	YTZ10S	-	-	-
500	Atlantic	03-05	-	-	CB14L-A2	-
500	Atlantic	06-	-	GTX12-BS	-	-
500	Scarabeo	-08	-	-	CB14L-A2	-
500	Scarabeo	08-	-	GTX12-BS	-	-
500	Scarabeo L	-	-	GTX12-BS	-	-
500	Scarabeo L USA	-	-	GTX12-BS	-	-
550	Enduro	-	-	GTX7A-BS	-	-
550	Motard	-	-	GTX7A-BS	-	-
550	RXV 550	-	-	GTX7A-BS	-	-
550	RXV 550 CND	-	-	GTX7A-BS	-	-
550	RXV 550 USA	-	-	GTX7A-BS	-	-
550	SXV 550	-	-	GTX7A-BS	-	-
550	SXV 550 CND	-	-	GTX7A-BS	-	-
550	SXV 550 USA	-	YTZ10S	-	-	-
600	ETX (Electric-Starter)	-	-	-	CB14L-A2	-
600	ETX (Kick Starter)	-	-	-	-	12N5.5-3B
600	Pegaso	88-94	-	-	CB14L-A2	-
600	Tuareg Wind	87-91	-	-	CB14L-A2	-
650	ETX (Electric-Starter)	-	-	-	CB14L-A2	-
650	ETX (Kick-Starter)	-	-	-	-	12N5.5-3B
650	Moto 6.5	95-99	-	-	CB12AL-A2	-
650	Pegaso	92-03	-	-	CB12AL-A2	-
650	Pegaso Strada	05-	-	GTX12-BS	-	-
650	Pegaso/IE	97-02	-	-	CB12AL-A	-
650	Pegaso Factory	-	-	GTX12-BS	-	-
650	Pegaso Trail	-	-	GTX12-BS	-	-
650	Stark	00-	-	-	CB14L-A2	-
750	Dorsoduro	-	-	GTX14-BS	-	-
750	Dorsoduro ABS	-	-	GTX14-BS	-	-
750	Dorsoduro USA	-	-	GTX14-BS	-	-
750	Shiver	-	-	GTX14-BS	-	-
750	Shiver ABS	-	-	GTX14-BS	-	-
750	Shiver CND	-	-	GTX14-BS	-	-
750	Shiver USA	-	-	GTX14-BS	-	-
800	Mana	-	-	GTX14-BS	-	-
839	SRV 850	12-	-	GTX14-BS	-	-

Объем	Модель	Год	High Performance AGM / Premium AGM	Maintenance Free	Heavy Duty	Conventional
APRILIA продолжение						
850	Mana	-	-	GTX14-BS	-	-
850	Mana ABS	-	-	GTX14-BS	-	-
850	Mana CND	-	-	GTX14-BS	-	-
850	Mana USA	-	-	GTX14-BS	-	-
1000	ETV Caponord	02-03	-	GTX14-BS	-	-
1000	RST Futura	01-04	-	GTX12-BS	-	-
1000	RSV 1000 Factory	04-05	-	GTX12-BS	-	-
1000	RSV 1000 4V Factory	-	YTZ10S	-	-	-
1000	RSV 1000 Factory USA	-	-	GTX12-BS	-	-
1000	RSV 1000 Mille	00	-	GTX14-BS	-	-
1000	RSV 1000 Mille	00-03	-	GTX12-BS	-	-
1000	RSV 1000 Mille R	00-05	-	GTX12-BS	-	-
1000	RSV 1000 Mille SP	99	-	GTX12-BS	-	-
1000	RSV 1000 R	-	-	GTX12-BS	-	-
1000	RSV 1000 R USA	-	-	GTX12-BS	-	-
1000	SL Falco	00-03	-	GTX14-BS	-	-
1000	Tuono	03-05	-	GTX12-BS	-	-
1000	Tuono Fighter	03-	-	GTX12-BS	-	-
1000	Tuono Factory	-	-	GTX12-BS	-	-
1000	Tuono Factory USA	-	-	GTX12-BS	-	-
1000	Tuono R	-	-	GTX12-BS	-	-
1000	Tuono R CND	-	-	GTX12-BS	-	-
1000	Tuono R USA	-	-	GTX12-BS	-	-
1200	Caponord	13-	-	GTX14-BS	-	-
1200	Dorsoduro 1200 ABS	13-	-	GTX14-BS	-	-
ATK						
All Electric Start Models		96-01	-	GTX7L-BS	-	
All Electric Start Models		91-95	-	GTX9-BS	-	
BAJAJ						
100	BOXER UG	03-05	-	-	CB2.5L-C	-
100	CT100 BOXER	05-12	-	-	CB2.5L-C	-
100	PLATINO 100	08-12	-	-	CB2.5L-C	-
100	BOXER BM100 CLASSIC KS	12-	-	-	CB2.5L-C	-
100	BOXER BM100 CLASSIC ES	12-	-	-	CB5L-B	-
100	DISCOVER 100 DTSi	12-	-	-	CB5L-B	-
125	DISCOVER 125 DTSi	08-12	-	-	CB2.5L-C	-
125	XCD 125	09-12	-	-	CB5L-B	-
125	PLATINO 125	10-12	-	-	CB5L-B	-
125	DISCOVER 125 ST	12-	-	-	CB5L-B	-
135	DISCOVER 135 KS	09-12	-	-	CB2.5L-C	-
135	DISCOVER 135 ES	09-12	-	-	CB5L-B	-
135	PULSAR 135LS	09-12	-	-	CB5L-B	-
150	BOXER BM150	-	-	-	CB5L-B	-
180	PULSAR 180 (ALL MODELS)	ALL	-	-	CB9-B	-
200	PULSAR 200	-	-	-	CB9-B	-
200	PULSAR 200 NS	01-12	-	GTX9-BS	-	-
220	PULSAR 220F/S	-	-	-	CB9-B	-
BENELLI						
50	491GT/Sport/Racing	-97	-	-	CB4L-B	-
50	Devil 50 (c/avv.)	-	-	-	CB4L-B	-
50	Devil (Electric-Starter)	94-95	-	-	CB4L-B	-
50	K2	97	-	-	CB4L-B	-
50	KBX 50 Race	-	-	-	CB4L-B	-
50	Pepe	00	-	-	CB4L-B	-
50	Scooty LX/DLX	-	-	-	CB4L-B	-
80	Devil	94-95	-	-	CB4L-B	-

МОЩНАЯ И ВЫСОКОПРОИЗВОДИТЕЛЬНАЯ ЛИНЕЙКА ОТ GS

Объем	Модель	Год	High Performance AGM / Premium AGM	Maintenance Free	Heavy Duty	Conventional
BENELLI продолжение						
80	KBX	94	-	-	CB4L-B	-
100	K2	00-	-	-	CB5L-B	-
125	125 Cross	-	-	-	-	6N11A-1B
125	125 Custom Guzzi	-	-	-	-	12N5.5-4A
125	125 Guzzi	-	-	-	-	12N5.5-4A
125	125 Jarno (c/avv.)	-	-	-	CB9-B	-
125	125 Scooter	-	-	-	CB9L-B	-
125	125-2 CSE	-	-	-	-	6N11A-1B
125	125CS	-	-	-	CB9-B	-
125	125T Sport	-	-	-	-	6N11A-1B
125	Adiva	00	-	GTX14-BS	-	-
125	Jarno (Electric-Starter)	00	-	-	-	12N9-4B-1
125	Velvet	00	-	GTX9-BS	-	-
150	Adiva 150	00	-	GTX14-BS	-	-
150	Velvet	00	-	GTX9-BS	-	-
250	4 Zyl. (Cyld.)	-	-	-	CB12A-A	-
250	TS250	-	-	-	-	6N11A-1B
250	Velvet	00	-	GTX12-BS	-	-
254	4 Zyl. (Cyld.)	-	-	-	CB9-B	-
350	350RS	00	-	-	53030	-
354	4 Zyl. (Cyld.)	-	-	-	CB14L-A2	-
500	LS	-	-	-	CB14L-A2	-
500	Quattro	00	-	-	53030	-
500	SS	00	-	-	-	12N12A-4A-1
504	4 Zyl. (Cyld.)	-	-	-	CB14L-A2	-
650	650 Tornado U.T.	-	-	-	CB12A-A	-
750	Sei	00	-	-	CB14L-A2	-
750	SS	00	-	-	-	12N12A-4A-1
900	900 (6 Cilindri)	-	-	-	53030	-
900	Sei	-	-	-	53030	-
900	Tornado	-	-	-	-	12N12A-4A-1
BETAMOTOR						
50	Adventure	-	-	-	CB4L-B	-
50	Ark Air/Ark Lc	-97	-	-	CB4L-B	-
50	Chrono	95	-	-	CB4L-B	-
50	Eikon	00	-	-	CB4L-B	-
50	Quadra	-97	-	-	CB4L-B	-
50	Tempo	-	-	-	CB4L-B	-
125	Eikon	00-	-	GTX9-BS	-	-
150	Eikon	00-	-	GTX9-BS	-	-
600	YB9	00-	-	-	CB12AL-A2	-
750	SB3	00-	-	-	-	12N14-3A
900	HS2900	00-	-	-	CB14L-A2	-
1000	YB10 Dieci	00-	-	GTX14-BS	-	-
1000	YB6	-	-	-	CB14L-A2	-
BIG DOG						
All	All Models	All	GTX20HL-BS	GTX20L-BS	-	-
BIMOTA						
600	YB9	-	-	-	CB12AL-A2	-
750	SB3	-	-	-	-	12N14-3A
900	DB2	93-95	-	-	CB14-A2	-
900	DB2 Final Edition	97	-	-	CB14-A2	-
900	DB3 Mantra	97-99	-	GTX7L-BS (x2)	-	-
900	DB4	98-00	Not available	-	-	-
900	HS2900	-	-	-	CB14L-A2	-
900	Tesi	91-95	-	-	CB14-A2	-

Объем	Модель	Год	High Performance AGM / Premium AGM	Maintenance Free	Heavy Duty	Conventional
BIMOTA продолжение						
996	SB8R, SB8RS	98-00	-	GTX12-BS	-	-
1000	Gobert	-	-	-	CB14L-A2	-
1000	Santamonica	-	-	-	CB14L-A2	-
1000	Tesi 2d	-	-	-	CB14L-A2	-
1000	YB10 DIECI	-	-	GTX14-BS	-	-
1000	YB11	96-99	-	GTX12-BS	-	-
1000	YB8/YB10	92-95	-	GTX14AL-BS	-	-
1100	SB6, SB7	95-97	-	GTX7L-BS (x2)	-	-
1100	SB6R	97-99	-	GTX12-BS	-	-
1000	YB6	-	-	-	CB14L-A2	-
BMW						
125	C1	00-	-	-	CB14L-A2	-
150	C1	00-	-	-	CB14L-A2	-
200	C1	00-	-	-	CB14L-A2	-
250	R25/2/3	-	-	-	-	B49-6
260	R26	-	-	-	-	B39-6
260	R26, R27 Single Cylinder	55-69	-	-	-	6N11A-1B
260	R27	-	-	-	-	6N11A-1B
450	R45N	78-88	-	-	51814	-
450	G450X	09-	YTZ7S	-	-	-
500	R50/2 Twin Cylinders	55-69	-	-	-	B38-6A
500	R50/5	-	-	-	51814	-
500	R50/R 50S/R 50-2/	-	-	-	51814	-
500	R50/S Twin Cylinders	55-69	-	-	-	B38-6A
500	R51/R51-2-3	00-	-	-	-	B49-6
600	60-5	00-	-	-	51814	-
600	C600 Sport	00-	YTZ14S	-	-	-
600	F650	93-01	-	-	CB12AL-A2	-
600	F650, S	93-	-	-	52515	-
600	F650CS/GS/ST	98-02	-	-	CB12AL-A2	-
600	R60, R60/2 Twin Cylinders	55-69	-	-	-	B38-6A
600	R60/5	70-73	-	-	51814	-
600	R60/6, R60/7	-84	-	-	53030	-
600	R60/6, R60/7	69-84	-	-	53030	-
600	R60LS	00-	-	-	51814	-
600	R60S	00-	-	-	-	12N14-3A
600	R65	85-	-	-	52515	-
600	R65/GS	86-92	-	-	51814	-
600	R65LS	81-85	-	-	51814	-
600	R69S	-	-	-	-	B49-6
650	C650GT	01-11	-	GTX14-BS	-	-
650	F650	93-08	-	-	CB12AL-A2	-
650	F650GS	08-11	-	-	CB12AL-A	-
650	R65	84-95	-	-	53030	-
650	R65LS	78-84	-	-	51814	-
700	R69 - R69S	55-69	-	-	-	B38-6A
750	K75	85-86	-	-	51814	-
750	K75	87-92	-	-	52515	-
750	K75	93-95	-	GT19BL-BS	51913	-
750	K75, RT	85-95	-	-	53030	-
750	K75, -S, -RT, RTJ	-	-	-	52515	-
750	K75C	85-86	-	-	51814	-
750	K75C	87-93	-	-	52515	-
750	K75C, S	85-95	-	-	51814	-
750	K75RT	92-96	-	GT19BL-BS	51913	-
750	K75S	85-86	-	-	51814	-
750	K75S	87-92	-	-	52515	-
750	R75/5	70-73	-	-	51814	-
750	R75/6	69-76	-	-	53030	-

Объем	Модель	Год	High Performance AGM / Premium AGM	Maintenance Free	Heavy Duty	Conventional
BMW продолжение						
750	R75/6, R75/7	-84	-	-	53030	-
750	R75/7	76-84	-	-	53030	-
750	R75-5 (Bicylinder)	00-	-	-	51814	-
750	R75-6	00-	-	-	53030	-
800	F800, GS, ST, R	08-11	-	GTX14-BS	-	-
800	R80	86-92	-	-	52515	-
800	R80 G/S	81-86	-	-	51814	-
800	R80 G/S	90-95	-	-	52515	-
800	R80, R80RT	84-95	-	-	53030	-
800	R80, R80RT	85-	-	-	52515	-
800	R80/7, R80RT	-84	-	-	53030	-
800	R80/7, R80RT	78-84	-	-	53030	-
800	R80ET	00-	-	-	53030	-
800	R80GS	88-	-	-	52515	-
800	R80GS, R80ST	80-96	-	-	51814	-
800	R80R	91-95	-	-	52515	-
800	R80ST	86-90	-	-	51814	-
850	R850R	95-97	-	GT19BL-BS	51913	-
850	R85C	99-01	-	GT19BL-BS	51913	-
850	R85R/RT/GS, R259	01	-	GT19BL-BS	51913	-
900	R90/6, R90S	-84	-	-	53030	-
900	R90/6, R9OS	69-76	-	-	53030	-
900	R90ST	00-	-	-	51814	-
1000	All K Models	83-93	-	-	53030	-
1000	HP4	13-	YTZ7S	-	-	-
1000	K1	93	-	GT19BL-BS	51913	-
1000	K1	89-92	-	-	52515	-
1000	K100	83-94	-	-	52515	-
1000	K100LT/RS	83-91	-	-	52515	-
1000	K100RT	83-93	-	-	52515	-
1000	R100 CS, RS, RT, S, T	-84	-	-	53030	-
1000	R100, -CS	80-84	-	-	52515	-
1000	R100/7	76-84	-	-	53030	-
1000	R100CS	76-84	-	-	53030	-
1000	R100GS, -Basic, -Mystic	90-95	-	-	52515	-
1000	R100GS, PD, R, RS, RT	87-95	-	-	53030	-
1000	R100PD	90-95	-	-	52515	-
1000	R100R	00-	-	GT19BL-BS	51913	-
1000	R100R	91-95	-	-	52515	-
1000	R100RM	91-95	-	-	52515	-
1000	R100RT, R100RS	87-94	-	-	52515	-
1000	S1000RR	09-	YTZ10S	-	-	-
1000	S1000RR(DWA)	09-	YTZ12S	-	-	-
1100	K1100-LT	93-98	-	GT19BL-BS	51913	-
1100	K1100LT/RS	90-95	-	GT19BL-BS	51913	-
1100	K1100RS	93-96	-	GT19BL-BS	51913	-
1100	R1100GS	94-00	-	GT19BL-BS	51913	-
1100	R1100R, LT, RS. RT	94-01	-	GT19BL-BS	51913	-
1100	R1100RS, RT	93-	-	GT19BL-BS	51913	-
1100	R1100S	99-02	-	GT19BL-BS	51913	-
1150	R1150 GS	00-02	-	GT19BL-BS	51913	-
1150	R1150GS, R	00-	-	GT19BL-BS	51913	-
1150	R1150R/RS/RT	01-02	-	GT19BL-BS	51913	-
1169	HP2	-	YTZ12S	-	-	-
1200	K1200 Cruiser	98-02	-	GT19BL-BS	51913	-
1200	K1200LT, GT, RS, S	97-	-	GT19BL-BS	51913	-
1200	K1200LT, GT	05-09	-	GT19BL-BS	51913	-
1200	K1200R, S	-	-	GTX14-BS	-	-
1200	R1200C, RT	98-	-	GT19BL-BS	51913	-
1200	R1200GS, K1200R	05-	-	GTX14-BS	-	-

Объем	Модель	Год	High Performance AGM / Premium AGM	Maintenance Free	Heavy Duty	Conventional
BMW продолжение						
1200	R1200GS	13-	YTZ14S	-	-	-
1200	R1200GS Adenture	09-	YTZ14S	-	-	-
1200	R1200GS Adenture successor	09-	YTZ14S	-	-	-
1200	R1200GS successor	09-	YTZ14S	-	-	-
1200	R1200R, S	-	-	GTX14-BS	-	-
1200	R1200R successor	09-	YTZ14S	-	-	-
1300	K1300GT	09-10	-	GT19BL-BS	51913	-
1300	K1300R, S	09-10	GTX14H-BS	GTX14-BS	-	-
1600	K1600GT, GTL	-	-	GT19BL-BS	51913	-
BSA						
-	250, 350, 400, 441, 500 (12V)	-	-	-	CB7-A	12N7-4A
-	250, 350, 650 (6V)	-	-	-	-	B39-6
-	600, 650, 750 (12V)	-	-	-	CB7-A	-
-	Bantam	-	-	-	-	6N5.5-1D
-	Rocket 750, Thunderbolt	-	-	-	CB9L-B	-
-	Spitfire HK35, Starfire B25	-	-	-	CB9L-B	-
1200	500 Gold Star	-	-	-	-	B38-6A
1200	500, 600, 650, 750 (12V)	-	-	-	CB7-A	12N7-4A
BSV						
50	GP Dio, Sp Dio	-	-	GTX4L-BS	-	-
50	GZ	-	-	GTX4L-BS	-	-
50	ZX	94-95	GTX4L-BS	GT4L-BS	-	-
100	R100 S	77-79	-	-	53030	-
100	R100 T	78-81	-	-	53030	-
BUELL						
500	Blast	00-08	-	GTX14-BS	-	-
1000	RR1000	87	GTX20H-BS	GTX20-BS	-	-
1200	M2 Cyclone	97-02	GTX20HL-BS	GTX20L-BS	-	-
1200	RR1200	88-90	GTX20H-BS	GTX20-BS	-	-
1200	RS1200	89-93	GTX20H-BS	GTX20-BS	-	-
1200	RSS1200	91-93	GTX20H-BS	GTX20-BS	-	-
1200	S1 Lightning	96-99	GTX14H-BS*	GTX14H-BS*	-	-
1200	S1 Lightning, WL White	96-99	GTX20HL-BS	-	-	-
1200	S2, S2T Thunderbolt	94-96	GTX20H-BS	GTX20-BS	-	-
1200	S3, S3T Thunderbolt	97-02	GTX20HL-BS	GTX20L-BS	-	-
1200	X1 Lightning	99-02	GTX20HL-BS	GTX20L-BS	-	-
CAGIVA						
50	City, Lucky, Explorer	94-97	-	GTX4L-BS	-	-
50	Cocis, Prima, Supercity	-	-	-	CB5L-B	-
50	Cucciolo, Mito	98	-	-	CB4L-B	-
50	K3, W4	98	-	-	CB4L-B	-
50	Prima	-	-	-	CB5L-B	-
125	Aletta Oro (Electric-Starter)	-	-	-	CB12A-A	-
125	Aletta Oro (Kick-Starter)	-	-	-	-	12N5.5-4A
125	Blues, Elefantre	-	-	-	CB12A-A	-
125	Crouser, CUCC125	87-88	-	-	CB9-B	-
125	Cuccido	-	-	-	CB9L-A2	-
125	Elefant, SST, WSXT	-	-	-	-	12N5.5-4A
125	EV	-	-	-	CB9-B	-
125	Freccia C9, /C10R, /C12R	87-90	-	-	CB9-B	-
125	K7, Passing	-	-	-	CB4L-B	-
125	Mito, -2, Replica, Ev.	90-98	-	-	CB9-B	-
125	Mitto125, R	94-97	-	-	CB9-B	-
125	N90	97	-	-	CB9-B	-
125	Planet	98	-	-	CB9-B	-

* Необходимо использовать адаптер, поставляемый Buell.

МОЩНАЯ И ВЫСОКОПРОИЗВОДИТЕЛЬНАЯ ЛИНЕЙКА ОТ GS

Объем	Модель	Год	High Performance AGM / Premium AGM	Maintenance Free	Heavy Duty	Conventional
CAGIVA продолжение						
125	Roadster	94-97	-	-	-	12N5.5-4A
125	SM125	00	-	GTX5L-BS	-	-
125	SST	-	-	-	-	12N5.5-4A
125	SST Electra	-	-	-	CB12A-A	-
125	Supercity	91-97	-	-	CB9-B	-
125	SXT	-	-	-	-	12N5.5-3B
125	Tamanaco	-	-	-	CB9-B	-
125	W8	-	-	-	CB4L-B	-
125	Wre125	00	-	GTX5L-BS	-	-
125	WSXT (Aletta Rossa)	-	-	-	-	12N5.5-4A
200	Elefant	-	-	-	-	12N5.5-4A
200	Roadstar	95	-	-	CB9-B	-
250	SST, SX	-	-	-	-	12N7-3B
300	Elefant 2 Cyl.	86-	-	-	CB14L-A2	-
300	SST, SX	-	-	-	-	12N7-3B
300	T4 Ala Rossa	-	-	-	-	12N5.5-4A
300	T4 E Elefant, W12	93-97	-	-	CB14L-A2	-
300	T4 R	87-	-	-	CB3L-A	-
300	W12	-	-	-	CB14L-A2	-
350	Elefant 2 Cyl.	86-	-	GTX14AL-BS	-	-
350	T4 E Elefant, W12	87-	-	GTX14AL-BS	-	-
350	T4R	87-	-	-	CB3L-A	-
500	Canyon, River	98-01	-	GTX14-BS	-	-
500	T4 E Elefant	88-	-	GTX14AL-BS	CB14L-A2	-
600	Canyon, River	95-96	-	-	CB14L-A2	-
600	Canyon, River	96-97	-	-	CB16AL-A2	-
600	W16	94-97	-	-	CB14L-A2	-
650	Elefant	86-	-	-	CB14L-A2	-
650	Raptor/V Raptor	00-02	-	GTX12-BS	-	-
650	Raptor 650	03-04	-	GTX9-BS	-	-
750	Elefant	94-97	-	-	CB16-B	-
750	Elefant Bifaro	89-	-	GTX14AL-BS	CB14L-A2	-
900	Canyon I.E.	98-00	-	-	CB16-B	-
900	E900	94-97	-	-	CB16AL-A2	-
900	Elefant, AC	93-96	-	-	CB16-B	-
900	Gran Canyon	99	-	-	CB16-B	-
900	I.E. GT	91-93	-	-	CB16-B	-
1000	Canyon I.E.	97-	-	-	CB16-B	-
1000	Gran Canyon	-	-	GTX14-BS	-	-
1000	I.E. GT	91-93	-	-	CB16-B	-
1000	Navigator	00-02	-	-	CB16-B	-
1000	Raptor/V Raptor	00-02	-	GTX12-BS	-	-
1000	V Raptor	03-04	-	GTX9-BS	-	-
CAN-AM						
990	Spyder	01-08	GTX24HL-BS	-	-	-
CANNONDALE						
400	EX400, MX400, XC400	00-01	YTZ7S	GTX5L-BS	-	-
440	C440, E440, S440, X440, X440S	02-03	YTZ7S	-	-	-
CCM						
600	All Electric Start Models ‘96-01	96-01	-	GTX9-BS	-	-
CHANGZHOU GUANGYANG						
100	CK100	-	-	GTX5L-BS	-	-
110	CK110	-	-	-	CB5L-B	-
125	CK125-T	-	-	GTX7A-BS	-	-

Объем	Модель	Год	High Performance AGM / Premium AGM	Maintenance Free	Heavy Duty	Conventional
CHANSHA GUANGNAN						
50	KN50QT	-	GTX4L-BS	GT4L-BS	-	-
100	KN100-2	-	-	GTX5L-BS	-	-
125	KN125-T	-	-	GTX7A-BS	-	-
CHONGQING LONGCIN						
90	LX90,LX90J	-	-	-	CB5L-B	-
110	LX110-13A	-	-	GTX5L-BS	-	-
110	LX110-3D II	-	-	-	CB5L-B	-
125	LX125-10	-	-	-	-	12N7-3B
125	LX125-3A	-	-	-	-	12N7-4B
125	LX125-5	-	-	-	-	12N9-4B-1
125	LX125-16A	-	-	GTX7A-BS	-	-
150	LX150-16	-	-	-	-	12N7A-3A
150	LX150-2EV	-	-	-	CB7L-B	-
150	ATV150-M	-	-	-	-	12N9-4B-1
200	LX200-2 II	-	-	-	-	12N7A-3A
200	LX200-3	-	-	-	-	12N7A-3A
250	JL250GY	-	-	GTX9-BS	-	-
250	LX250Y-3	-	-	GTX7L-BS	-	-
90	JL90	-	-	-	CB5L-B	-
125	JL125-5A	-	-	-	-	12N7-3B
150	JL150	-	-	-	-	12N7A-3A
150	JL150-3A	-	-	-	-	12N9-4B-1
150	JL150-6A	-	-	-	-	12N7-4B
DACHANGJIANG						
100	AX100	-	-	-	-	6N4-2A
100	HJ-110	-	-	-	CB5L-B	-
125	GZ125HS	-	-	GTX7L-BS	-	-
125	HJ125F	-	-	-	CB7-A	-
125	HJ125J-8	-	-	-	CB7-A	-
125	HJ125T-9	-	-	GTX7A-BS	-	-
DACHANGJIANG						
125	NS125	97-	-	GTX7A-BS	-	-
125	VC125	96	-	-	CB9-B	-
125	VS125	97	-	-	CB9-B	-
DERBI						
50	All 50cc Models	-	-	-	CB4L-B	-
125	Boulevard 125	-	-	-	CB9L-A2	-
150	Boulevard 150	-	-	-	CB9L-A2	-
DUCATI						
75	Cross	-	-	-	-	B38-6A
75	Six Days	-	-	-	-	6N4-2A-4
129	Aurea	-	-	-	-	B39-6
175	Cross	-	-	-	-	B38-6A
200	Motocarro	-	-	-	-	12N24-3A
250	Cross	-	-	-	-	B38-6A
350	Alazurra	87-	-	-	CB14L-A2	-
350	Cross	-	-	-	-	B38-6A
350	F3	87-	-	-	CB14L-A2	-
350	GTL, GTV Sport	-	-	-	C50-N18L-A	-
350	Indiana, Pantah, XL	-	-	-	CB14L-A2	-
350	Mark3, Scrambler	-	-	-	-	B38-6A
350	Sport	-	-	-	C50-N18L-A	-
350	SS Supersport	93-	-	-	CB16AL-A2	-
350	Vento	-	-	-	CB12A-A	-

Объем	Модель	Год	High Performance AGM / Premium AGM	Maintenance Free	Heavy Duty	Conventional
DUCATI продолжение						
400	Alazurra, F3	87-	-	-	CB14L-A2	-
400	Monster	-	-	GT12B-BS	-	-
400	SS Supersport	91-99	-	-	CB16AL-A2	-
400	TS	-	-	-	-	B38-6A
500	GTL, GTV	-	-	-	C50-N18L-A	-
500	Pantah	-	-	GTX14AL-BS	CB14L-A2	-
500	Sport	-	-	-	C50-N18L-A	-
600	M Chromo	98	-	-	CB16AL-A2	-
600	M City/M Dark/M Dark City	98-00	-	-	CB16AL-A2	-
600	M Dark	01	-	GT12B-BS	-	-
600	Monster	01	-	GT12B-BS	-	-
600	Monster	94-00	-	-	CB16AL-A2	-
600	Pantah	-	-	GTX14AL-BS	CB14L-A2	-
600	SS Supersport	94-98	-	-	CB16AL-A2	-
600	TL	-	-	GTX14AL-BS	CB14L-A2	-
620	Monater/IE/S IE/Sport	02-03	-	GT12B-BS	-	-
650	Alazurra, Indiana, Pantah	-	-	GTX14AL-BS	CB14L-A2	-
696	Monster 696	-	-	GT12B-BS	-	-
748	Biposto	01-03	-	GT12B-BS	-	-
748	S R	01-02	-	GT12B-BS	-	-
748	Strada Biposto, SP, SPS	97-00	-	-	CB16AL-A2	-
749	Superbike 749R, S	-	-	GT12B-BS	-	-
750	F1, Montijuich, Paso	87-91	-	GTX14AL-BS	CB14L-A2	-
750	GT, Luguna Seca	-	-	-	53030	-
750	Indiana	-	-	GTX14AL-BS	CB14L-A2	-
750	M City/M Dark/M Dark City	99-00	-	-	CB16AL-A2	-
750	M Dark	01	-	GT12B-BS	-	-
750	M IE/M IE Dark	02	-	GT12B-BS	-	-
750	Monster	01	-	GT12B-BS	-	-
750	Monster	95-00	Not available	-	-	-
750	New Monster	-	-	GT12B-BS	-	-
750	Paso/F1	87-90	-	-	CB14L-A2	-
750	Sport	01-02	-	GT12B-BS	-	-
750	Sport	89-90	-	-	CB16AL-A2	-
750	SS	90-00	-	-	CB16AL-A2	-
750	SS IE	00	-	-	CB16AL-A2	-
750	SS IE	01-02	-	GT12B-BS	-	-
750	SS Supersport (Kick-Starter)	-	-	-	CB12A-A	-
750	SS Veloce	98	-	-	CB16AL-A2	-
800	Monster S	03-	-	GT12B-BS	-	-
800	Monster S2R	05	-	GT12B-BS	-	-
800	Supersports	-	-	GT12B-BS	-	-
803	Hypermotard 796	-	-	GT12B-BS	-	-
803	Monster 795	-	-	GT12B-BS	-	-
803	Monster 796	-	-	GT12B-BS	-	-
849	Streetfighter 848	-	-	GT12B-BS	-	-
849	Superbike 848 EVO	-	-	GT12B-BS	-	-
849	Superbike 848 EVO Corse SE	-	-	GT12B-BS	-	-
850	Electric	-	-	-	C60-N24L-A	-
851	Biposto/SP2/SPORT	89-90	-	-	CB16AL-A2	-
851	S Superbike	91-92	-	-	CB16AL-A2	-
851	Strada	89	-	-	CB16AL-A2	-
851	Superbike	90-91	-	-	CB16AL-A2	-
851	Superbike, Strada	89-90	-	-	CB16B-A	-
860	GT, GTS	-	-	-	53030	-
860	Kick-Start	-	-	-	CB12A-A	-
888	SP, SP II, SP IV, SP V	90-95	-	-	CB16AL-A2	-
888	Strada	91-94	-	-	CB16AL-A2	-
899	Panigale	14-	-	GT7B-BS	-	-
900	M Chromo	01	-	GT12B-BS	-	-

Объем	Модель	Год	High Performance AGM / Premium AGM	Maintenance Free	Heavy Duty	Conventional
DUCATI продолжение						
900	M Chromo	98-00	-	-	CB16AL-A2	-
900	M City/M Dark/M Dark City	99-00	-	-	CB16AL-A2	-
900	M Dark	01	-	GT12B-BS	-	-
900	M IE2/M IE DARK2	02	-	GT12B-BS	-	-
900	M Metallic	00	-	-	CB16AL-A2	-
900	M Metallic/M S	01	-	GT12B-BS	-	-
900	M Special	98-00	-	-	CB16AL-A2	-
900	Monster	00-	-	GT12B-BS	-	-
900	Monster, Superlight	94-00	-	-	CB16AL-A2	-
900	SD Darmah	-	-	-	53030	-
900	SL	92-96	-	-	CB16AL-A2	-
900	Sport	02	-	GT12B-BS	-	-
900	SS	89-00	Not available	-	-	-
900	SS (avviamento pedale)	-	-	-	-	12N12A-4A-1
900	SS IE	00	-	-	CB16AL-A2	-
900	SS IE	01-02	-	GT12B-BS	-	-
900	SS (Kick-Starter)	-81	-	-	CB12A-A	-
900	SS Replica	-81	-	-	CB12A-A	12N12A-4A-1
900	SS Supersport, Replica	82-	-	GTX14AL-BS	CB14L-A2	-
900	Supersport FE	97-99	-	-	CB16AL-A2	-
904	Supersport 900	99	-	-	CB16AL-A2	-
906	Paso	89-94	-	-	CB14L-A2	-
906	Paso	90-92	-	-	CB16-B	-
907	I.E. Paso	90-94	-	-	CB16-B	-
916	Biposto, Senna, Strada	94-98	-	-	CB16AL-A2	-
916	I.E., SP, SP S	94-98	-	-	CB16AL-A2	-
916	Monster S4	81-83	-	GT12B-BS	-	-
916	ST4	01-	-	GT12B-BS	-	-
916	ST4	99-00	-	-	CB16AL-A2	-
944	Sport Touring 2 (ST2)	97-00	-	-	CB16AL-A2	-
944	ST2	01-03	-	GT12B-BS	-	-
992	ST3	-	-	GT12B-BS	-	-
996	996, S, SPS	99-00	-	-	CB16AL-A2	-
996	Monoposto	99-00	-	-	CB16AL-A2	-
996	Monoposto, Bistro, S	01-	-	GT12B-BS	-	-
996	Sport Touring v4S	01-	-	GT12B-BS	-	-
996	SPS/SPS2	99-00	-	-	CB16AL-A2	-
996	ST4S ABS	01-	-	GT12B-BS	-	-
998	998, 999, R, S	02-03	-	GT12B-BS	-	-
998	Monoposto/S/Biposto	02-03	-	GT12B-BS	-	-
998	ST4	01-	-	GT12B-BS	-	-
1000	Desmosedici RR	-	-	GT12B-BS	-	-
1000	Monster S2R	-	-	GT12B-BS	-	-
1000	Monster S4, S4RS, S4R	03	-	GT12B-BS	-	-
1000	Multistrada	03	-	GT12B-BS	-	-
1000	Supersport HF	03	-	GT12B-BS	-	-
1078	Hypermotard 1100 EVO	-	-	GT12B-BS	-	-
1078	Hypermotard 1100 EVO SP	-	-	GT12B-BS	-	-
1078	Monster 1100 EVO	-	-	GT12B-BS	-	-
1078	Monster Diesel	-	-	GT12B-BS	-	-
1098	1098	07	-	GTX14-BS	-	-
1098	Hypermotard 1100S	-07	-	GT12B-BS	-	-
1098	Superbike 1098, S, Tricolore	-07	-	GT12B-BS	-	-
1099	Streetfighter S	-	-	GT12B-BS	-	-
1198	Diavel	-	-	GT12B-BS	-	-
1198	Diavel Cromo	-	-	GT12B-BS	-	-
1198	Diavel Carbon	-	-	GT12B-BS	-	-
1198	Diavel AMG	-	-	GT12B-BS	-	-
1198	Multistrada 1200	-	-	GT12B-BS	-	-
1198	Multistrada 1200 S Sport	-	-	GT12B-BS	-	-

Объем	Модель	Год	High Performance AGM / Premium AGM	Maintenance Free	Heavy Duty	Conventional
DUCATI продолжение						
1198	Multistrada 1200 S Touring	-	-	GT12B-BS	-	-
1198	Multistrada 1200 S Pikes Peak	-	-	GT12B-BS	-	-
1198	Superbike 1199 Panigale	-	-	GT7B-BS	-	-
1198	Superbike 1199 Panigale S	-	-	GT7B-BS	-	-
1198	Superbike 1199 Panigale S Tricolore	-	-	GT7B-BS	-	-
-	All other models	01-07	-	GT12B-BS*	-	-
E-TON						
50	Beamer 50, Beamer III	00-12	YTZ7S	GTX5L-BS	-	-
50	Matrix 50	-12	YTZ7S*	GTX5L-BS	-	-
50	Sport 50	-12	-	GTX7A-BS	-	-
150	Sport 150	-12	-	GTX7A-BS	-	-
150	Matrix R4-150	-12	-	GTX9-BS	-	-
150	Beamer R4-150	-12	-	GTX9-BS	-	-
EXCELSIOR-HENDERSON						
1386	Super X	99-00	GTX20HL-BS	GTX20L-BS	-	-
FANTIC MOTOR						
50	Grinta	95-96	GTX4L-BS	GT4L-BS	-	-
50	HP1	-	-	-	CB4L-B	-
50	Koala	93-97	-	-	CB4L-B	-
50	Leader	95	GTX4L-BS	GT4L-BS	-	-
50	Oasis	-	-	-	CB4L-B	-
50	Oasis EPV	-	-	-	-	12N5.5-3B
50	Pony, SR	95	-	-	CB4L-B	-
50	Queenie	95	GTX4L-BS	GT4L-BS	-	-
50	TX220	-	-	-	-	B39-6
80	Koala	93-96	-	-	CB4L-B	-
125	Raider LC	-	-	-	CB3L-A	-
125	Strada-Sport	85	-	-	-	6N4B-2A
250	Raider LC	-	-	-	CB3L-A	-
GARELLI						
50	Big Racing	94	-	-	CB4L-B	-
50	Big Wheel	94-95	-	-	CB4L-B	-
50	Grinta	95-96	GTX4L-BS	GT4L-BS	-	-
50	Noi	-	-	-	CB4L-B	-
50	Pony, Pony SR	94-95	-	-	CB4L-B	-
50	Queenie	95	GTX4L-BS	GT4L-BS	-	-
50	Sahel, Team, Urka	-	-	-	CB4L-B	-
50	XLE Tiger	-	-	-	CB4L-B	-
125	GTA (Electric-Starter)	-	-	-	CB9-B	-
125	GTA (Kick-Starter)	-	-	-	CB5L-B	-
125	TSR	-	-	-	-	12N7-4B
125	XR Tiger (Electric-Starter)	-	-	-	CB9-B	-
125	XR Tiger (Kick-Starter)	-	-	-	CB5L-B	-
GAS GAS						
250	Pampera	96-01	-	GTX4L-BS	-	-
320	Pampera	98-01	-	GTX4L-BS	-	-
370	Pampera	97	-	GTX4L-BS	-	-
GILERA						
50	503	-	-	-	CB4L-B	-
50	Bullit, Easy Moving, Runner	-97	-	-	CB4L-B	-
50	DNA	-	-	GTX4L-BS	-	-
50	Eaglet	95-97	-	-	CB4L-B	-

* На некоторых более ранних моделях может потребоваться модификация крепления.

Объем	Модель	Год	High Performance AGM / Premium AGM	Maintenance Free	Heavy Duty	Conventional
GILERA продолжение						
50	Easy Moving	-	-	-	CB4L-B	-
50	GSA (Electric-Starter)	-	-	-	CB4L-B	-
50	Ice	-	-	GTX4L-BS	-	-
50	Runner	02-	-	GTX4L-BS	-	-
50	Runner	-97	-	-	CB4L-B	-
50	Runner Purejet	02-	-	-	CB9-B	-
50	Runner/SP	-97	-	-	CB4L-B	-
50	Sioux El.-Starter	-	-	-	CB4L-B	-
50	Stalker, Storm, Top Rally	-	-	-	CB4L-B	-
50	Typhoon, X	-97	-	-	CB4L-B	-
125	Apache (Electric-Starter)	-	-	-	CB9-B	-
125	Apache (Kick-Starter)	-	-	-	-	12N5.5-3B
125	Arizona (Electric-Starter)	-	-	-	CB9-B	-
125	Arizona (Kick-Starter)	-	-	-	-	12N5.5-3B
125	Coguar	99	-	-	CB9-B	-
125	Crono (Electric-Starter)	-	-	-	CB9-B	-
125	Crono (Kick-Starter)	-	-	-	-	12N5.5-3B
125	CX (Electric-Starter)	-	-	-	CB9-B	-
125	CX (Kick-Starter)	-	-	-	-	12N5.5-3B
125	DNA	-	-	-	CB10L-B	-
125	Fast Bike (Electric-Starter)	-	-	-	CB9-B	-
125	Fast Bike (Kick-Starter)	-	-	-	-	12N5.5-3B
125	Freestyle (Electric-Starter)	-	-	-	CB9-B	-
125	Freestyle (Kick-Starter)	-	-	-	-	12N5.5-3B
125	GFR (Electric-Starter)	-	-	-	CB9-B	-
125	GFR (Kick-Starter)	-	-	-	-	12N5.5-3B
125	GR1	-	-	-	-	6N11A-3A
125	KK, KZ (Electric-Starter)	-	-	-	CB9-B	-
125	KK, KZ (Kick-Starter)	-	-	-	-	12N5.5-3B
125	MX1, MXR (Electric-Starter)	-	-	-	CB9-B	-
125	MX1, MXR (Kick-Starter)	-	-	-	-	12N5.5-3B
125	Nebraska (Electric-Starter)	-	-	-	CB9-B	-
125	Nebraska (Kick-Starter)	-	-	-	-	12N5.5-3B
125	R1, R1S (Electric-Starter)	-	-	-	CB9-B	-
125	R1, R1S (Kick-Starter)	-	-	-	-	12N5.5-3B
125	RC Rally	-	-	-	CB10L-B	-
125	RTX, RV, RX (Electric-Starter)	-	-	-	CB9-B	-
125	RTX, RV, RX (Kick-Starter)	-	-	-	-	12N5.5-3B
125	Runner FX, SP	-	-	-	CB9-B	-
125	Runner VX4T	-	-	GT12B-BS	-	-
125	RV (Electric-Starter)	-	-	-	CB9-B	-
125	RV (Kick-Starter)	-	-	-	-	12N5.5-3B
125	RTX (Electric-Starter)	-	-	-	CB9-B	-
125	RTX (Kick-Starter)	-	-	-	-	12N5.5-3B
125	SP01,SP02 (Electric-Starter)	-	-	-	CB9-B	-
125	SP01,SP02 (Kick-Starter)	-	-	-	-	12N5.5-3B
125	TG1	-	-	-	-	6N11A-3A
125	TOP Rally (Electric-Starter)	-	-	-	CB9-B	-
125	TOP Rally (Kick-Starter)	-	-	-	-	12N5.5-3B
125	Typhoon	-	-	-	CB7-A	-
125	X	-	-	-	CB9-B	-
125	XR1, XR2 (Electric-Starter)	-	-	-	CB9-B	-
125	XR1, XR2 (Kick-Starter)	-	-	-	-	12N5.5-3B
180	Runner FXR, SP	-	-	-	CB10L-B	-
180	Runner SP	99	-	GTX12-BS	-	-
180	Runner VXR4T	-	-	GT12B-BS	-	-
200	Arizona (Electric-Starter)	-	-	-	-	12N5.5-3B
200	Arizona (Kick-Starter)	-	-	-	CB9-B	-
200	Fast Bike (Electric-Starter)	-	-	-	-	12N5.5-3B
200	Fast Bike (Kick-Starter)	-	-	-	CB9-B	-

Объем	Модель	Год	High Performance AGM / Premium AGM	Maintenance Free	Heavy Duty	Conventional
GILERA продолжение						
200	Motocarro	-	-	-	-	B38-6A
200	RTX, RV, RX (Electric-Starter)	-	-	-	CB9-B	-
200	RTX, RV, RX (Kick-Starter)	-	-	-	-	12N5.5-3B
200	RV (Electric-Starter)	-	-	-	CB9-B	-
200	RV (Kick-Starter)	-	-	-	-	12N5.5-3B
200	T4	-	-	-	-	12N5.5-3B
250	Arizona Rally	-	-	-	CB10L-B	-
250	RV NGR (Electric-Starter)	-	-	-	CB10L-B	-
250	RV NGR (Kick-Starter)	-	-	-	-	12N5.5-3B
350	Dakota (Electric-Starter)	-	-	-	CB10L-A2	-
350	Dakota (Kick-Starter)	-	-	-	-	12N5.5-3B
350	ER (Electric-Starter)	-	-	-	CB10L-A2	-
350	ER (Kick-Starter)	-	-	-	-	12N5.5-3B
350	XRT	-	-	-	CB14L-A2	-
500	Dakota (Electric-Starter)	-	-	-	CB10L-A2	-
500	Dakota (Kick-Starter)	-	-	-	-	12N5.5-3B
600	Nordwest	93	-	-	CB14L-A2	-
600	RC600C	93	-	-	CB14L-A2	-
600	Top Rally, XRT	-	-	-	CB14L-A2	-
GUANGYANG MOTOR						
50	CK50	-	-	GT4L-BS	-	12N7-4B
100	CK100	-	-	GTX5L-BS	-	-
110	CK110	-	-	-	CB5L-B	-
110	KK110	-	-	-	CB5L-B	-
125	KN125-2	-	-	-	-	12N7A-3A
125	KN125T, KK125T	-	-	GTX7A-BS	-	-
125	CK125-2B	-	-	-	-	12N7A-3A
125	CK125-6	-	-	-	-	12N7-3B
125	CK125T, CK125-2F	-	-	GTX7A-BS	-	-
150	CK150	-	-	GTX9-BS	-	-
GUANGZHOU HUANAN						
-	FYEY	-	-	GTX4L-BS	-	-
-	FYJ	-	-	-	-	12N9-4B-1
-	FYLS/FYFSB	-	-	GTX7L-BS	-	-
-	FYT3A	-	-	GTX5L-BS	-	-
-	H2100	-	-	GTX7A-BS	-	-
HAOJIN						
100	HJ100-3	-	-	-	CB5L-B	-
100	HJ100T-E	-	-	GTX7A-BS	-	-
100	HJ100T-A	-	-	GTX7A-BS	-	-
125	HJ125-2,3,5,9,10,15,18	-	-	-	-	12N9-4B-1
125	HJ125-7,6,6A	-	-	-	CB7-A	-
125	HJ125T,-3,8,B,D,2D	-	-	GTX7A-BS	-	-
125	HJ125-A	-	-	-	-	12N7A-3A
150	HJ150-9,10	-	-	-	-	12N9-4B-1
150	HJ150ST	-	-	GTX9-BS	-	-
250	HJ250	-	-	-	-	12N9-4B-1
HARLEY-DAVIDSON						
90	Z90	73-76	-	-	CB7L-B	12N7-3B
125	SS125, SX125	74-78	-	-	CB7L-B	12N7-3B
125	SXT125	75-78	-	-	CB7L-B	12N7-3B
125	TX125	73-78	-	-	CB7L-B	12N7-3B
175	SS175, SX175	74-78	-	-	CB7L-B	12N7-3B
250	SS250, SX250	75-78	-	-	CB7L-B	12N7-3B
350	SS350	Все годы	-	-	-	6N11A-1B

Объем	Модель	Год	High Performance AGM / Premium AGM	Maintenance Free	Heavy Duty	Conventional
HARLEY-DAVIDSON продолжение						
500	MT500 (Military)	Все годы	-	GTX14AL-BS	CB14L-A2	-
883	XL, XLH (Sportster)	01-04	-	GTX14L-BS	-	-
883	XL, XLH (Sportster)	97-03	GTX20HL-BS	GTX20L-BS	-	-
883	XLH (Sportster)	86-96	GTX20H-BS	GTX20-BS	CB16-B	-
1000	XL Series (Sportster)	79-85	GTX20H-BS	GTX20-BS	CB16-B	-
1000	XLCH Series (Sportster Kick-Starter)	70-78	-	-	CB7-A	12N7-4A
1000	XLCR Cafe Racer	77-78	GTX20H-BS	GTX20-BS	CB16-B	-
1000	XLH (Sportster Electric-Starter)	67-78	-	-	-	CHD4-12
1000	1000 XLX-61, XR1000	83-85	GTX20H-BS	GTX20-BS	CB16-B	-
1100	XL Series (Sportster)	87-93	GTX20H-BS	GTX20-BS	CB16-B	-
1200	FL/FLH Series (Touring)	65-77	-	-	-	CHD4-12
1200	FX Series (Electric-Starter)	71-78	GTX20H-BS	GTX20-BS	CB16-B	
1200	FX Series (Kick-Starter)	71-72	-	-	CB7-A	12N7-4A
1200	XL, XLH (Sportster)	01-04	-	GTX14L-BS	-	-
1200	XL, XLH (Sportster)	97-03	-	GTX20L-BS	-	-
1200	XL, XLH (Sportster)	87-96	GTX20H-BS	GTX20-BS	-	-
1340	FL, FLH Series (Touring)	80-96	GTX24HL-BS	-	-	-
1340	FL, FLH Series (Touring)	78-84	-	-	-	CHD4-12
1340	FLST Series (Softail)	97-99	GTX20HL-BS	GTX20L-BS	-	-
1340	FLST Series (Softail)	91-96	GTX20HL-BS	GTX20L-BS	-	-
1340	FX/FXR Series	79-94	GTX20H-BS	GTX20-BS	CB16-B	-
1340	FXD/FXST Series (Dyna)	97-99	-	GTX20L-BS	-	-
1340	FXD/FXST Series (Dyna)	91-96	GTX20HL-BS	GTX20L-BS	-	-
1340	FXR Series	99-00	GTX20H-BS	GTX20-BS	CB16-B	-
1340	FXST/FLST Series (Softail)	84-90	GTX20H-BS	GTX20-BS	CB16-B	-
1450	FXD Series (Dyna)	99-06	-	GTX20L-BS	-	-
1450	FXST, FLST Series (Softail)	00-06	-	GTX20L-BS	-	-
1580	FXD Series (Dyna)	07-10	GTX20HL-BS	GTX20L-BS	-	-
1580	FXST, FLST Series (Softail)	07-10	GTX20HL-BS	GTX20L-BS	-	-
1584	FL, FLH Series (Touring)	07-11	GIX30L-BS	-	-	-
1584	FXD Series (Dyna)	01-07	-	GTX20L-BS	-	-
1584	FXST, FLST Series (Softail)	01-07	-	GTX20L-BS	-	-
1690	FLH, FLT(Touring)	01-10	GIX30L-BS	-	-	-
1690	FXD (Dyna)	01-11	-	GTX20L-BS	-	-
1690	FLS (Softail)	01-11	-	GTX20L-BS	-	-
1803	CVO FLH (Touring)	01-07	GIX30L-BS	-	-	-
1803	CVO FLST (Softail)	01-07	-	GTX20L-BS	-	-
1803	CVO FXD Fat Bob (Dyna)	10-12	-	GTX20L-BS	-	-
HEINKEL						
600	150, R103, Tourist 103A/Z	-	-	-	-	6N11A-3A (x 2pcs.)
600	Scooter Tourist	-	-	-	-	6N11A-3A
HERCULES (SACHS)						
50	FOX	93	-	-	CB5L-B	-
50	Gipsy	95	-	-	CB4L-B	-
50	KX5	93-97	-	-	CB4L-B	-
50	Limbo L, M, MA, ML	95-97	-	-	CB4L-B	-
50	Reggage, Reggage Splinter	96-97	-	-	CB4L-B	-
50	Samba, Swing	94-97	-	-	CB4L-B	-
50	Ultra	-	-	-	-	12N9-3B
80	CV City	-	-	-	-	6N11-2D
80	RX 9	-	-	-	CB5L-B	-
80	SR Samba	94-96	-	-	CB5L-B	-
80	Ultra AC, F, RS	-	-	-	-	12N9-3B
125	125E	-	-	-	-	6N11A-1B
125	K103, K105X	-	-	-	-	6N11A-1B
125	K125 S-RT, T-RT	-	-	-	-	6N11A-1B
125	K125X Military	-	-	-	-	6N11A-1B

Объем	Модель	Год	High Performance AGM / Premium AGM	Maintenance Free	Heavy Duty	Conventional
HERCULES (SACHS) продолжение						
125	SR125 Samba	94-97	-	-	CB5L-B	-
125	W2000 Wankel	-	-	-	CB18L-A	-
HMZ						
50	Cab	96	GTX4L-BS	GT4L-BS	-	-
HONDA						
50	Benly 50	11-	GTX4L-BS	GT4L-BS		
50	Bite	01-	YTZ7S	-	-	-
50	C100, T, CA100, T, C110, CA110	59-69	-	-	-	6N2-2A
50	C110	09	YTZ7S	-	-	-
50	C50SW	94	-	-	CB4L-B	-
50	C50Z, Z2	79-80	-	-	-	6N4-2A-4
50	CB50 J, J (B)	79-81	-	-	-	6N4-2A-4
50	CB50J, F	81	-	-	-	6N2-2A
50	CD50	82	-	-	-	6N4-2A-4
50	CF50	82	-	-	-	6N4-2A-4
50	CHF50	09-	YTZ7S	-	-	-
50	CHF50 Metropolitan, II, SP	02-12	YTZ7S	-	-	-
50	CRM50	93-94	-	-	CB3L-A	-
50	Dio	12-	-	GTX4L-BS	-	-
50	Dio Cesta	11-	-	GTX4L-BS	-	-
50	Dio Z4	-02	YTZ7S	-	-	-
50	Dio50 (SP50 Dio)	93-94	GTX4L-BS	GT4L-BS	-	-
50	EVC50	10-	-	GT4L-BS	-	-
50	Fifty	-	-	-	CB4L-B	-
50	Giorcub	01-	YTZ7S	-	-	-
50	Giorno Crea	-03	YTZ7S	-	-	-
50	Giorno (A-AF24)	92-	-	GTR4A-BS	-	-
50	Giorno (JBH-AF70)	11-	-	GTX4L-BS	-	-
50	Gorilla	01-	-	GTR4A-BS	-	-
50	GP Dio	00-	-	GTX4L-BS	-	-
50	Gyro Canopy (TA02)	00-	-	GTX7L-BS	-	-
50	Gyro Canopy (JBH-TA03)	08-	YTZ7S	-	-	-
50	Gyro Up	00-	-	GTX4L-BS	-	-
50	Gyro X	00-	-	GTX4L-BS	-	-
50	Gyro X Standard	08-	YTZ7S	-	-	-
50	Julio	01-	YTZ7S	-	-	-
50	KGB	-99	YTZ7S	-	-	-
50	Lead	-01	GTX4L-BS	GT4L-BS	-	-
50	Lead	01-	YTZ7S	-	-	-
50	Little Cub	00-	GTX4L-BS	GT4L-BS	-	-
50	MB5	82	-	-	CB2.5L-C	-
50	MB50 S (A)	80	-	-	-	6N4-2A-7
50	MBX50FW, FWD, S, SD, SWD	85-87	-	-	CB3L-A	-
50	Monkey	93-	-	GTR4A-BS	-	-
50	MT50S	90-91	-	-	-	6N4-2A-7
50	MTX50 S (E)	84	-	-	CB2.5L-C	-
50	MTX50FR, RS, S	85-89	-	-	CB3L-A	-
50	NA50 Express II	79	-	-	-	6N2-2A
50	NA50 Express II	80-81	-	-	-	6N4-2A-8
50	NB50 Aero	85-87	-	GTX4L-BS	-	-
50	NB50, M	83-87	GTX4L-BS	GT4L-BS	-	-
50	NB50M Aero	83-84	-	-	CB4L-B	-
50	NC50 Express	77	-	-	-	6N2A-2C-3
50	NC50 Express	78-79	-	-	-	6N2-2A
50	ND50 M	82	-	-	CB4L-B	-
50	NH50 MS	86-98	-	-	CB4L-B	-
50	NJ50	-	YTZ7S	-	-	-
50	NN50MD Gyro	84	-	-	CB4L-B	-

Объем	Модель	Год	High Performance AGM / Premium AGM	Maintenance Free	Heavy Duty	Conventional
HONDA продолжение						
50	NPS50	10-	YTZ7S	-	-	-
50	NP50, M Sky	-97	-	-	CB4L-B	-
50	NPS50, S Ruckus	01-03	YTZ7S	-	-	-
50	NQ50 Spree	84-85	-	-	CB4L-B	-
50	NQ50 Spree, 50D SS	86-87	-	GTX4L-BS	-	-
50	NQ50, M	85	-	-	CB4L-B	-
50	NQ50, M	86-87	GTX4L-BS	GT4L-BS	-	-
50	NS50F, NS 1	90-99	-	-	CB3L-A	-
50	NSR50, A, F	87-95	-	-	CB3L-A	-
50	NU50 Urban Express	82-83	-	-	CB2.5L-C-1	-
50	NU50M Urban Express Deluxe	82-83	-	-	CB4L-B	-
50	NX50M Express SR	81-82	-	-	CB4L-B	-
50	P50 Little Honda	67-68	-	-	-	6N4-2A-4
50	PA50 I, II	78-83	-	-	-	6N4B-2A-5
50	PK Wallaroo	-	-	GTX4L-BS	-	-
50	PK50, M, SM	90-99	GTX4L-BS	GT4L-BS	-	-
50	Press Cub	-	GTX4L-BS	GT4L-BS	-	-
50	PX50 MS	84	-	-	CB4L-B	-
50	PXR	-	-	-	CB4L-B	-
50	SA Vision	-	-	GTX4L-BS	-	-
50	SA50 Elite LX, S, SR	88-01	-	GTX4L-BS	-	-
50	SB50 (All)	88-90	-	GTX4L-BS	-	-
50	SC01	97	GTX4L-BS	GT4L-BS	-	-
50	SC01	01-	-	GTX4L-BS	-	-
50	SE50	88-89	GTX4L-BS	GT4L-BS	-	-
50	SE50 Elite (All)	87	-	GTX4L-BS	-	-
50	SFX50 Sport	95-99	-	GTR4A-BS	-	-
50	SG50M	90	GTX4L-BS	GT4L-BS	-	-
50	SGX50 Sky	97	GTX4L-BS	GT4L-BS	-	-
50	SH50	87-89	-	-	CB4L-B	-
50	SH50 Scoopy	96-97	-	GTR4A-BS	-	-
50	SH50 Scoopy, Crea	01-	YTZ7S	-	-	-
50	Shadow 50	97	GTX4L-BS	GT4L-BS	-	-
50	Shadow 50	01-	-	GTX4L-BS	-	-
50	SJ50 Bali	-97	-	GTR4A-BS	-	-
50	SK50, M	92-94	GTX4L-BS	GT4L-BS	-	-
50	SK50, M	97-98	-	GTR4A-BS	-	-
50	Sky	00-	-	GTX4L-BS	-	-
50	Sky Dax	99	GTX4L-BS	GT4L-BS	-	-
50	Sky Vetro	99	-	GTR4A-BS	-	-
50	SP Dio	-	-	GTX4L-BS	-	-
50	SR50	97-	-	GTX4L-BS	-	-
50	ST50 Dax	88-97	GTX4L-BS	GT4L-BS	-	-
50	Super Cub 50	07-	GTX4L-BS	GT4L-BS	-	-
50	SXR	-	-	GTR4A-BS	-	-
50	SZX50	00	-	GTR4A-BS	-	-
50	Tact	01-	YTZ7S	-	-	-
50	TC50	00-	-	GTX7L-BS	-	-
50	TG50 Gyro S (All)	85-86	-	GTX4L-BS	-	-
50	Vision 50	93-94	GTX4L-BS	GT4L-BS	-	-
50	X8R-X/X8R-S	99-	-	GTR4A-BS	-	-
50	Z50J	92	-	GTR4A-BS	-	-
50	Z50J, 2, 3	79-91	-	-	-	6N2A-2C-3
50	ZB50	88	-	GTX4L-BS	-	-
50	ZB50P Monkey	88	GTX4L-BS	GT4L-BS	-	-
50	Zoomer	01-	YTZ7S	-	-	-
50	ZX50	94-	-	GTR4A-BS	-	-
55	C, CA105T Trail	62-65	-	-	-	6N2-2A
65	S65 Sport (CS65)	65-69	-	-	-	6N2-2A
70	C70 Passport	80-81	-	-	-	6N11-2D

Объем	Модель	Год	High Performance AGM / Premium AGM	Maintenance Free	Heavy Duty	Conventional
HONDA продолжение						
70	C70 Passport	82-83	-	-	CB5L-B	-
70	C70, DM	82-84	-	-	CB5L-B	-
70	C70CM	83-84	-	-	-	6N4-2A-4
70	C70CMP	97	-	-	CB4L-B	-
70	C70M	70-73	-	-	-	6N11-2D
70	C70-MA	90	-	-	-	6N4-2A-4
70	C70W	95	-	-	CB4L-B	-
70	C70Z, Z2	79-93	-	-	-	6N4-2A-4
70	CD70	81	-	-	-	6N4-2A-4
70	CD70 II PK	92	-	-	CB2.5L-C	-
70	CF70	82	-	-	-	6N4-2A-7
70	CT70	91-94	-	GTX4L-BS	-	-
70	CT70 (Canada)	86	-	-	-	6N4-2A-4
70	CT70 (Canada)	91-94	GTX4L-BS	GT4L-BS	-	-
70	CT70 Trail	74-79	-	-	-	6N4C-1B
70	CT70 Trail	80-82	-	-	-	6N4-2A-8
70	CT70 Trail, 70H	69-71	-	-	-	6N2A-2C
70	CT70, 70H	72-73	-	-	-	6N2A-2C-3
70	SL70 Motosport	73	-	-	-	6N2A-2C-3
70	SL70 Motosport	71-72	-	-	-	6N2A-2C
70	ST70	89-94	GTX4L-BS	GT4L-BS	-	-
70	ST70 Dax	80-	-	-	-	6N2-2A-8
70	XL70	74-76	-	-	-	6N4C-1B
75	CRM75, MTX75R	89-94	-	-	CB3L-A	-
75	MBX75 FW	83	-	-	CB3L-A	-
75	NSR75	92-94	-	-	CB3L-A	-
75	SA75M	91	GTX4L-BS	GT4L-BS	-	-
75	Scoopy 75	93-94	-	-	CB5L-B	-
75	SH75	87-89	-	-	CB5L-B	-
75	XL75	77-79	-	-	-	6N4C-1B
80	CH80	-	-	GTX5L-BS	-	-
80	CH80 Elite	93-07	-	GTX5L-BS	-	-
80	MB80 S	80	-	-	-	6N4-2A-7
80	MBX80 SW, SWD, 2, FWD	85-87	-	-	CB3L-A	-
80	MCX80 S	83	-	-	CB3L-A	-
80	MT80 S	80	-	-	-	6N4-2A-7
80	MTX80 C	82	-	-	CB2.5L-C	-
80	MTX80 R2, RS	87	-	-	CB3L-A	-
80	NH80 Aero	85	-	GTX5L-BS	-	-
80	NH80 MD, SD, MS	86-94	-	-	CB5L-B	-
80	NH80MD Aero	83-84	-	-	CB5L-B	-
80	XL80	85-90	-	-	-	6N4-2A-8
80	XL80 (USA)	80-82	-	-	-	6N4C-1B
80	XL80 (USA)	83-85	-	-	-	6N4-2A-8
80	XL80S	80-82	-	-	-	6N4C-1B
80	XL80S	83-85	-	-	-	6N4-2A-8
90	C90 CW	95	-	-	CB4L-B	-
90	C90 D, Z	92-93	-	-	-	6N4-2A-4
90	C90, M	82-93	-	-	CB5L-B	-
90	CL90, L 5HP Scrambler	67-70	-	-	-	6N5.5-1D
90	CT200 Trail 90	64-66	-	-	-	6N5.5-1D
90	CT90 Trail	66-79	-	-	-	6N5.5-1D
90	EZ90 Cub	91-96	-	GTX5L-BS	-	-
90	Shadow 90	-	-	GTX5L-BS	-	-
90	Shadow 90	99	GTX4L-BS	GT4L-BS	-	-
90	SL90 Motosport	69	-	-	-	6N5.5-1D
90	ST90 Trail Sport	73-75	-	-	-	6N5.5-1D
90	Super Cub	-	GTX4L-BS	GT4L-BS	-	-
90	TH90T	96	GTX4L-BS	GT4L-BS	-	-
100	BC100	-	GTX4L-BS	GT4L-BS	-	-

Объем	Модель	Год	High Performance AGM / Premium AGM	Maintenance Free	Heavy Duty	Conventional
HONDA продолжение						
100	C100-M	88-92	-	-	CB5L-B	-
100	C100-MA	87	GTX4L-BS	GT4L-BS	-	-
100	C100-TH	92	GTX4L-BS	GT4L-BS	-	-
100	CB100	94	-	-	-	6N6-3B
100	CB100	70-	-	-	-	6N6-3B-1
100	CB100 N	81	-	-	-	6N6-3B
100	CB100 Super Sport	70-72	-	-	-	6N6-3B
100	CL100 S Scrambler	70-73	-	-	-	6N6-3B
100	EX Bali	97	-	GTX5L-BS	-	-
100	GL100 II	83	-	-	CB2.5L-C	-
100	H100 S	86-88	-	-	-	6N4-2A-7
100	Lead	08	-	GTX7L-BS	-	-
100	Lead EX	10-	-	GTX7L-BS	-	-
100	NF100, M	97	-	GTX5L-BS	-	-
100	NH100-1D	98	-	GTX5L-BS	-	-
100	NH100-1D	84-	-	-	CB5L-B	-
100	SCV100	03-	-	GTX5L-BS	-	-
100	SH100	00	-	GTX5L-BS	-	-
100	SH100 Scoopy	96	-	GTX5L-BS	-	-
100	SJ Bali EX	-	-	GTX5L-BS	-	-
100	SL100 Motosport	70-73	-	-	-	6N6-3B
100	XL100	74-76	-	-	-	6N6-3B
100	XL100	77-78	-	-	-	6N4C-1B
100	XL100	85-90	-	-	-	6N4C-1B
100	XL100S	79-80	-	-	-	6N4-2A-4
100	XL100S	81-82	-	-	-	6N4C-1B
100	XL100S	83-85	-	-	-	6N4-2A-4
110	Benry 110	12-	-	GTX4L-BS	-	-
110	C110	09	YTZ7S	-	-	-
110	C110B	10-	YTZ7S	-	-	-
110	CT110 Trail	86	-	-	-	6N4-2A-4
110	CT110 Trail	80-84	-	-	-	6N4-2A-8
110	Dio 110	11-	-	GTX7L-BS	-	-
110	LS110-TH	89-92	-	-	CB3L-A	-
110	NHX110 Elite	01-10	-	GTX7L-BS	-	-
110	NT110MV	97	-	-	CB4L-B	-
110	NT110V	97	-	-	CB2.5L-C	-
110	NZ110 M, MS	93	-	-	CB2.5L-C	-
110	NZ110 MM	93	-	-	CB4L-B	-
110	NZ110 S, S1, RS	89-92	-	-	CB2.5L-C	-
110	NZ110-TH	87	-	-	CB2.5L-C	-
110	Super Cub 110	09-	YTZ7S	-	-	-
110	Super Cub 110 Pro	09-	YTZ7S	-	-	-
110	TH110-MA, M	91	-	-	CB2.5L-C	-
110	Vision 110	-	-	GTX7L-BS	-	-
125	CA125	95-96	-	GTX7L-BS	-	-
125	CA125 Rebel	95-97	-	GTX7L-BS	-	-
125	CB Italia	-	-	-	-	6N6-3B
125	CB125 B6	-	-	-	-	6N12A-2D
125	CB125 K	-	-	-	-	6N12A-2D
125	CB125 RS	83	-	-	CB2.5L-C	-
125	CB125 S, S III-V	79-82	-	-	-	6N6-3B
125	CB125 S2, J, N	-79	-	-	-	6N6-3B
125	CB125 T, T II	80-81	-	-	-	6N6-3B
125	CB125 T, T II	90-93	-	-	-	12N9-4B-1
125	CB125 TD	82	-	-	CB9-B	-
125	CB125N	79	-	-	-	6N6-3B-1
125	CB125S	76	-	-	-	6N6-3B-1
125	CB125S	73-80	-	-	-	6N6-3B
125	CB125S	81-82	-	-	-	6N6-3B-1

Объем	Модель	Год	High Performance AGM / Premium AGM	Maintenance Free	Heavy Duty	Conventional
HONDA продолжение						
125	CBX/Endurance	-	-	-	-	6N6-3B
125	CD125 T	81-82	-	-	CB9-B	12N9-4B-1
125	CG125 (Electric-Starter)	-	-	GTX5L-BS	-	-
125	CG125 (Kick-Stater)	-	GTX4L-BS	GT4L-BS	-	-
125	CG125, -IR	92	-	-	CB3L-A	-
125	CG125, -IR	80-91	-	-	-	6N6-3B
125	CH125	84	-	-	CB9-B	-
125	CH125 Elite	84	-	-	CB9-B	-
125	CH125 Spacy	88-95	-	GTX9-BS	-	-
125	CHA125T	96	-	GTX9-BS	-	-
125	City Fly	98	-	GTX5L-BS	-	-
125	CL125 Scrambler	73-75	-	-	-	6N4C-1B
125	CL125A Scrambler (Twin)	67-69	-	-	-	-
125	CLR125	-99	-	GTX5L-BS	-	-
125	CM125 C	82-94	-	-	-	12N9-4B-1
125	CMX	-	-	GTX7L-BS	-	-
125	CRM	-	-	GTX4L-BS	-	-
125	CRM125 R	90	GTX4L-BS	GT4L-BS	-	-
125	CS	-	-	-	-	6N6-3B
125	CT125, Trail	77-89	-	-	-	6N4C-1B
125	FES125	00	-	GTX9-BS	-	-
125	FES125, Panteon	03-	-	GTX7L-BS	-	-
125	GL125 II, -IN	87-97	-	-	CB2.5L-C	-
125	MBX125 F	85	-	-	CB5L-B	-
125	MT125 Elsinore	74-76	-	-	-	6N6-3B
125	MTX125 RW, RW-TH	85-90	-	-	CB3L-A	-
125	MTX125, R, R2	86-87	-	-	CB5L-B	-
125	NES125, Dylan	00-	-	GTX7L-BS	-	-
125	NH125 Aero	84	-	-	CB5L-B	-
125	NH125 Lead	83-86	-	-	CB5L-B	-
125	NS125 F	89	-	-	CB5L-B	-
125	NS125 R, R2, R3	87	-	-	CB5L-B	-
125	NSR125 F III/R/R2/Raiden	92	-	GTX5L-BS	-	-
125	NSR125 R	97	-	GTX5L-BS	-	-
125	NX125	-	-	-	-	12N9-4B-1
125	NX125	88-90	-	GTX7L-BS	-	-
125	NX125 Transcity	97	-	GTX7L-BS	-	-
125	NXR125	-	-	GTX5L-BS	-	-
125	NZ125	93	-	-	CB3L-A	-
125	Pantheon 125	99	-	GTX9-BS	-	-
125	PCX 125	10-	YTZ7S	-	-	-
125	SES125	00-	-	GTX7L-BS	-	-
125	SH125	01-12	-	GTX7L-BS	-	-
125	SH125	13-	YTZ7S	-	-	-
125	Shadow 125	99	-	GTX7L-BS	-	-
125	SL125 Motosport	71-73	-	-	-	6N6-3B
125	Spacy 125	01-	YTZ12S	-	-	-
125	TL125	88	-	-	-	6N2-2A
125	TMX125	85	-	-	-	6N6-3B
125	VT125 Shadow	-	-	GTX7L-BS	-	-
125	VT125C	01-	YTZ7S	-	-	-
125	WW125EX	10-	YTZ7S	-	-	-
125	XL125	74-78	-	-	-	6N4C-1B
125	XL125	85-90	-	-	-	6N4C-1B
125	XL125 S	79-82	-	-	-	6N4-2A-4
125	XL125 S	84	-	-	-	6N4C-1B
125	XL125R/Pais Dakar	85-87	-	-	-	12N9-4B-1
125	XL125SD	-	-	-	CB2.5L-C-2	-
125	XLR125R	98	-	GTX7A-BS	-	-
125	XLV125 Valadero	01-	YTZ7S	-	-	-

Объем	Модель	Год	High Performance AGM / Premium AGM	Maintenance Free	Heavy Duty	Conventional
HONDA продолжение						
135	HX135, -TH	84-87	-	-	CB2.5L-C	-
145	GL145 II	83-88	-	-	CB2.5L-C	-
150	CBX150 S	88	-	-	CB7L-B	-
150	CG150 Titan	-	-	GTX7L-BS	-	-
150	CH150 Elite	87	-	GTX9-BS	-	-
150	CH150 Elite Deluxe	85-86	-	-	CB9-B	-
150	CRF150F	01-06	YTZ7S	GTX5L-BS	-	-
150	FES150	99-02	-	GTX9-BS	-	-
150	FES150	03-	-	GTX7L-BS	-	-
150	Foresight 150	-	-	GTX7L-BS	-	-
150	NES150	03-	-	GTX7L-BS	-	-
150	NES150 Z	01	-	GTX7L-BS	-	-
150	NSR150, R, R2	89	-	-	CB2.5L-C	-
150	NSR150, R, R2	94-98	-	-	CB3L-A	-
150	NX150	89	-	-	CB7L-B	-
150	Pantheon	-	-	GTX9-BS	-	-
150	PCX 150	12-	YTZ7S	-	-	-
150	SES150	00-	-	GTX7L-BS	-	-
150	SH150	01-10	-	GTX7L-BS	-	-
150	SH150	13-	YTZ7S	-	-	-
150	XLR150	00-	-	GTX5L-BS	-	-
156	GL156S	95	-	-	CB2.5L-C	-
160	CB160 Sport	65-69	-	-	CB9-B	12N9-4B-1
160	CL160 Scrambler	66-68	-	-	CB9-B	12N9-4B-1
175	CA175 Touring (CD175K3)	69-70	-	-	-	6N12A-2D
175	CB175 Super Sport	69-73	-	-	CB9-B	12N9-4B-1
175	CL175 Scrambler	68-73	-	-	CB9-B	12N9-4B-1
175	SL175 Motosport	70-72	-	-	-	12N5-4B
175	XL175	73-78	-	-	-	6N6-3B
185	CM185 T Twinstar	78-79	-	-	-	6N12A-2D
185	CT185	82-86	-	-	-	6N4C-1B
185	XL185 S	79-83	-	-	-	6N4-2A-4
200	CB200 T	74-76	-	-	CB9-B	12N9-4B-1
200	CBX200 S	93	-	-	CB7L-B	-
200	CL200 Scrambler	74	-	-	CB9-B	12N9-4B-1
200	CM200 T	85-88	-	GTX12-BS	-	-
200	CM200 T	87-89	-	-	-	12N9-4B-1
200	CM200 T Twinstar	80	-	-	-	6N12A-2D
200	CM200 T Twinstar	81-82	-	-	CB9-B	12N9-4B-1
200	CT200	86-89	-	-	CB9-B	-
200	GLS200	94	-	-	CB7L-B	-
200	MTX200 RW	85	-	-	CB3L-A	-
200	TLR200	86-87	-	-	-	6N2-2A
200	TLR200 Reflex	86-87	-	GTX4L-BS	-	-
200	TR200	86	-	GTX9-BS	-	-
200	TR200	87	-	GTX7A-BS	-	-
200	TR200 Fat Cat	86	-	GTX9-BS	-	-
200	TR200 Fat Cat	87	-	GTX7A-BS	-	-
200	XL200 R/Paris Dakar	83-84	-	-	-	12N9-4B-1
200	XL200R	83-84	-	-	CB3L-A	-
200	XR200	00-	-	GTX7L-BS	-	-
223	CB223S	10-	YTZ7S	-	-	-
225	FTR	06-08	-	GTX5L-BS	-	-
225	FTR	09-	YTZ7S	-	-	-
230	CRF230L, M	01-08	YTZ7S	-	-	-
230	CRF230F, L (-07)	01-03	YTZ7S	GTX5L-BS	-	-
230	SL230	-	-	GTX5L-BS	-	-
230	XR230	01-	YTZ7S	-	-	-
250	CA250 T	95	-	GTX7L-BS	-	-
250	CA250TS	97	-	GTX7L-BS	-	-

Объем	Модель	Год	High Performance AGM / Premium AGM	Maintenance Free	Heavy Duty	Conventional
HONDA продолжение						
250	CA72 Dream Touring (late)	63-66	-	-	-	12N9-3A
250	CB250	91-97	-	GTX7L-BS	-	-
250	CB250 G, K, N, ND	-82	-	-	CB12A-A	-
250	CB250 Nighthawk	91-07	-	GTX7L-BS	-	-
250	CB250 RS	80	-	-	-	12N9-4B-1
250	CB250 T	80	-	-	CB12A-A	-
250	CB250 T2 Twin	79	-	-	CB12A-A	-
250	CB250FV Hornet	-	-	GTX7L-BS	-	-
250	CB72 Hawk	61-66	-	-	-	12N9-3A
250	CBR250R	01-11		GTX7L-BS	-	-
250	CBR250RR	-	-	GTX7L-BS	-	-
250	CBX250 Twister	-	-	GTX7L-BS	-	-
250	CBX250, RS-YA	85-87	-	GTX9-BS	-	-
250	CD250 U	85-89	-	GTX9-BS	-	-
250	CH250	87-89	-	GTX12-BS	-	-
250	CH250 Elite	85-90	-	GTX12-BS	-	-
250	CJ250 T	-	-	-	CB9-B	-
250	CL250 S	82	-	-	CB9-B	-
250	CL72 Scrambler	62-65	-	-	-	12N5-4B
250	CM250, Custom	82-83	-	-	CB9-B	-
250	CM250 C	82-85	-	-	CB9-B	-
250	CMX250	-	-	GTX7L-BS	-	-
250	CMX250 C Rebel	96-13	-	GTX7L-BS	-	-
250	CMX250 C Rebel	85-87	-	-	CB9L-B	-
250	CMX250 C Rebel, LTD	85-87	-	-	CB9L-B	-
250	CMX250C3	01-	-	GTX7L-BS	-	-
250	CN250 Helix, Fusion Type XX	86-07	-	GTX12-BS	-	-
250	CRF250L	13-	-	GTX7L-BS	-	-
250	CRF250M	13-	-	GTX7L-BS	-	-
250	CRF250X, XD	01-04	YTZ7S	GTX5L-BS	-	-
250	Faze	09-	YTZ12S	-	-	-
250	FES250 Foresight	01-	YTZ12S	-	-	-
250	FES250V Foresight	98-00	-	GTX12-BS	-	-
250	Forza Si	13-	YTZ12S	-	-	-
250	Forza X, Z	01-	YTZ12S	-	-	-
250	MT250 Elsinore	74-76	-	-	-	6N6-3B
250	NS250S	-01	YTZ12S	-	-	-
250	NSR250RR/R	97	GTX4L-BS	GT4L-BS	-	-
250	NSS250	10-	YTZ12S	-	-	-
250	NSS250 Jazz	01-	YTZ12S	-	-	-
250	NSS250 Reflex	01-07	YTZ12S	-	-	-
250	NX250	88-96	-	GTX7L-BS	-	-
250	PS250 Big Ruckus	05-06	YTZ12S	-	-	-
250	SM250	09-12	YTZ12S	-	-	-
250	VT250	90-95	-	GTX7L-BS	-	-
250	VT250C V-Twin Magna	-	-	GTX7L-BS	-	-
250	VT250CS	-97	-	GTX7L-BS	-	-
250	VTR-F	13-	YTZ7S	-	-	-
250	VTR250, RD	10-	YTZ7S	-	-	-
250	VTR250 Interceptor VTR	88-90	-	-	CB9-B	-
250	XL250	72-76	-	-	-	6N6-3B
250	XL250 R	84-87	-	-	CB3L-A	-
250	XL250 RC	82-83	-	-	CB3L-A	-
250	XL250R	82-87	-	-	CB3L-A	-
250	XL250S	78-81	-	-	-	6N4-2A-4
250	XR250	-	-	GTX5L-BS	-	-
250	XR250 L, R	91-98	-	GTX4L-BS	-	-
250	XR250 Tornado	-	-	GTX7L-BS	-	-
300	SH300	10-	YTZ12S	-	-	-
305	CA77 Dream Touring (late)	63-69	-	-	-	12N9-3A

Объем	Модель	Год	High Performance AGM / Premium AGM	Maintenance Free	Heavy Duty	Conventional
HONDA продолжение						
305	CB77 Super Hawk	61-68	-	-	-	12N9-3A
305	CL77 Scrambler	65-68	-	-	-	12N5-4B
350	CB350 S	86	-	-	CB12A-B	-
350	CB350 Super Sport Four	68-74	-	-	CB12A-A	12N12A-4A-1
350	CB350F, CB350K	-	-	-	CB12A-A	-
350	CL350 Scrambler	68-73	-	-	CB12A-A	12N12A-4A-1
350	SL350 Motosport	69-70	-	-	CB12A-A	12N12A-4A-1
350	SL350 Motosport	70-73	-	-	-	12N5-4B
350	XL350	74-78	-	-	-	6N6-3B
350	XL350R, XR350R	84-87	-	-	CB3L-A	-
360	CB360 G, T, Scrambler 360	74-76	-	-	CB12A-A	12N12A-4A-1
360	CJ360T	76-77	-	-	CB9-B	12N9-4B-1
360	CL360 Scrambler	74-75	-	-	CB12A-A	12N12A-4A-1
400	400X	13-	YTZ10S	-	-	-
400	CB400 Super Bold'or	05-	YTZ10S	-	-	-
400	CB400 N	79	-	-	CB12A-A	-
400	CB400 SS	-03	-	GTR4A-BS	-	-
400	CB400 Super Four	01-	YTZ10S	-	-	-
400	CB400A	78	-	-	CB12A-A	-
400	CB400D/SD		YTZ10S	-	-	-
400	CB400F CB-1	89-90	-	GTX9-BS	-	-
400	CB400F Super Sport	75-77	-	-	CB12A-A	12N12A-4A-1
400	CB400F/F II	75	-	-	-	12N12A-4A-1
400	CB400SF/SB	10-	YTZ10S	-	-	-
400	CB400T Hawk	80-81	-	-	CB12A-A	-
400	CB400T Hawk I	78-79	-	-	CB9-B	12N9-4B-1
400	CB400T Hawk II	78-79	-	-	CB12A-A	-
400	CBR400R	13-	YTZ10S	-	-	-
400	CBR400RRR	86-89	-	GTX9-BS	-	-
400	CBX400F/F II	-	-	-	CB12A-A	-
400	CM400A Hondamatic	79-81	-	-	CB12A-A	-
400	CM400C Custom	81	-	-	CB12A-A	-
400	CM400E/T	79-82	-	-	CB12A-A	-
400	CX400 C	81-83	-	-	CB14L-A2	-
400	NS400 R/Raiden	-	-	GTX5L-BS	-	-
400	NS400R	85	-	GTX5L-BS	-	-
400	NV400 DC Shadow	01-	-	GTX14-BS	-	-
400	NV400 DC Shadow Skasher	01-	YTZ10S	-	-	-
400	NV400 Steed	01-	YTZ10S	-	-	-
400	NV400C	95	-	GTX9-BS	-	-
400	RVF400 (NC35)	-	-	GTX7A-BS	-	-
400	Shadow Classic 400	08-	YTZ10S	-	-	-
400	Shadow Custom 400	08-	YTZ10S	-	-	-
400	Silver Wing 400	01-	YTZ12S	-	-	-
400	Silver Wing GT400	09-	YTZ12S	-	-	-
400	VF400 F	83	-	-	CB12A-A	-
400	VFR400R III (NC30)	90-91	-	GTX7A-BS	-	-
400	VT400S	10-	YTZ10S	-	-	-
450	CB450, SS	67-74	-	-	CB12A-A	12N12A-4A-1
450	CB450K/K7	-	-	-	-	12N12A-4A-1
450	CB450N	85	-	-	CB12AL-A2	-
450	CB450S	88	-	GTX14A-BS	CB14-B2	-
450	CB450S	86-87	-	-	CB12A-B	-
450	CB450SC	82-86	-	-	CB12A-A	-
450	CB450SC Nighthawk, T	82-86	-	-	CB12A-A	-
450	CB450SC Nighthawk/S	85-86	-	-	CB12A-A	-
450	CB450T Hawk	82	-	-	CB12A-A	-
450	CL450 Scrambler	67-74	-	-	CB12A-A	12N12A-4A-1
450	CM450A Hondamatic, E	82-83	-	-	CB12A-A	-
450	CM450C Custom, E	82-83	-	-	CB12A-A	-

Объем	Модель	Год	High Performance AGM / Premium AGM	Maintenance Free	Heavy Duty	Conventional
HONDA продолжение						
450	CMX450C, Rebel	86-88	-	-	CB12A-A	-
450	CRF450X, XD	01-05	YTZ7S	-	-	-
500	CB500	04-	YTZ10S	-	-	-
500	CB500F	13-	YTZ10S	-	-	-
500	CB500R	13-	YTZ10S	-	-	-
500	CB500X	13-	YTZ10S	-	-	-
500	CB500 Four, Twin	71-76	-	-	CB12A-A	12N12A-4A-1
500	CB500K-1/K-3	-	-	-	-	12N12A-4A-1
500	CB500S	98-99	-	GTX9-BS	-	-
500	CB500T Twin, Four	75-76	-	-	-	12N12A-4A-1
500	CBF500	04-	YTZ10S	-	-	-
500	CBR500F	87-89	-	GTX9-BS	-	-
500	CBR500R	13-	YTZ10S	-	-	-
500	CX500 Custom	-	-	-	CB12A-A	-
500	CX500, C, D, E, T, TC	78-82	-	GTX14AL-BS	CB14L-A2	-
500	FT500 Ascot	82-83	-	GTX14AL-BS	CB14L-A2	-
500	GB500	89-90	-	-	CB12A-B	-
500	GL500 I Intercept	81-82	-	-	CB14L-A2	-
500	GL500, I Silver Wing	81-82	-	GTX14AL-BS	CB14L-A2	-
500	NX500	88-95	-	GTX9-BS	-	-
500	VF500C V30 Magna	84-85	-	-	CB12A-A	-
500	VF500F Interceptor, FII	84-86	-	-	CB12A-A	-
500	VT500C Shadow	83-86	-	-	CB12A-A	-
500	VT500E	83-85	-	-	CB12A-A	-
500	VT500FT Ascot	83-84	-	-	CB12A-A	-
500	XBR500	85-86	-	-	CB12A-B	-
500	XBR500, S	87-88	-	GTX14A-BS	CB14-B2	-
500	XL500R	82-87	-	-	CB3L-A	-
500	XL500S	79-81	-	-	-	6N4-2A-4
550	CB550	83-84	-	-	CB12AL-A2	-
550	CB550 F	74-77	-	-	-	12N12A-4A-1
550	CB550 Four, K, SS	74-78	-	-	CB12A-A	12N12A-4A-1
550	CB550 K2/K4	77-78	-	-	-	12N12A-4A-1
550	CB550SC Nighthawk	83-85	-	-	CB12AL-A2	-
550	CBX550F, F II	82-83	-	-	CB12A-A	-
582	FSC600 Silver Wing	02-07	YTZ12S	-	-	-
600	CB600 F, Hornet, ABS	01-07	-	GTX7L-BS	-	-
600	CB600 SF	02	YTZ7S	GTX7L-BS	-	-
600	CB600F	07-	YTZ10S	-	-	-
600	CB600F (599)	04-06	-	GTX7L-BS	-	-
600	CBF600	07-	YTZ10S	-	-	-
600	CBF600N, NA	03-07	-	GTX7L-BS	-	-
600	CBF600S, SA	03-07	-	GTX7L-BS	-	-
600	CBR600	87-00	-	GTX9-BS	-	-
600	CBR600 F	-	YTZ10S	-	-	-
600	CBR600 F, F II, F III, SE	95-99	-	GTX9-BS	-	-
600	CBR600 F4i, 600RR	01-01	YTZ10S	-	-	-
600	CBR600RR	09-	YTZ10S	-	-	-
600	CBR600F/SP	01-	YTZ10S	-	-	-
600	CBR600F/SP	87-00	-	GTX9-BS	-	-
600	CBR600FS/SX	01-	YTZ10S	-	-	-
600	CBX600E	83	-	-	CB12AL-A2	-
600	FSC600	01-02	YTZ12S	-	-	-
600	FJS600, Sliver Wing	01-	YTZ12S	-	-	-
600	FJS600DB/AB	10-	YTZ12S	-	-	-
600	Hornet 600	98	-	GTX7L-BS	-	-
600	NTV600	88-92	-	GTX9-BS	-	-
600	NV600C	89-94	-	GTX9-BS	-	-
600	Shadow 600	-	-	GTX9-BS	-	-
600	Silver Wing	88-00	-	GTX14A-BS	CB14-B2	-

Объем	Модель	Год	High Performance AGM / Premium AGM	Maintenance Free	Heavy Duty	Conventional
HONDA продолжение						
600	Silver Wing GT 600	09-	YTZ12S	-	-	-
600	VT600 C Shadow	88-99	-	GTX9-BS	-	-
600	VT600 C, CD Shadow Deluxe	04-07	YTZ10S	-	-	-
600	VT600C, CD Shadow Deluxe, VLX	88-03	-	GTX9-BS	-	-
600	VT600C	88-97	-	GTX9-BS	-	-
600	XL600 Transport	-87	-	-	CB12A-B	-
600	XL600LM	85-91	-	-	CB14-A2	-
600	XL600R	83-87	-	-	CB3L-A	-
600	XL600V	87-93	-	GTX14A-BS	CB14-B2	-
600	XL600V	94-00	-	-	CB12A-B	-
600	XL600V Transalp	89-90	-	-	CB12A-B	-
600	XL600V Transport	95-97	-	-	CB12A-B	-
650	CB650	79-82	-	-	CB12A-A	-
650	CB650 C Custom	80-81	-	-	CB12A-A	-
650	CB650 SC Custom	82	-	-	CB12A-A	-
650	CB650 SC Nighthawk	83-85	-	-	CB12AL-A2	-
650	CB650, Custom	79-82	-	-	CB12A-A	-
650	CB650SC Nighthawk	82	-	-	CB12A-A	-
650	CB650SC Nighthawk	83-85	-	-	CB12AL-A2	-
650	CB650Z	79	-	-	CB12A-A	-
650	CBX650E Nighthawk	84	-	-	CB14L-A2	-
650	CBX650E Nighthawk	82-83	-	-	CB12AL-A2	-
650	CX650 Euro,Turbo	83	-	-	CB14L-A2	-
650	CX650C Custom	83	-	GTX14A-BS	CB14-A2	-
650	CX650T Turbo	83	-	GTX14AL-BS	CB14L-A2	-
650	Deauville 650	-	-	GTX9-BS	-	-
650	FX650	-01	-	GTX9-BS	-	-
650	GL650 I Interstate	83	-	-	CB14L-A2	-
650	GL650 Silver Wing	83	-	-	CB14L-A2	-
650	GL650I Silver Wing Interstate	83	-	GTX14AL-BS	CB14L-A2	-
650	NT650 Hawk GT	88-91	-	GTX9-BS	-	-
650	NT650V	-	-	GTX9-BS	-	-
650	NTV650 Revere	88-97	-	GTX9-BS	-	-
650	NX650	88-89	-	GTX9-BS	-	-
650	NX650 Dominator	88-97	-	GTX9-BS	-	-
650	SLR650	97-98	-	GTX9-BS	-	-
650	Vigor 650	99	-	GTX9-BS	-	-
650	XL650, V, Transalp	01-	YTZ12S	-	-	-
650	XR650L	93-13	-	GTX9-BS	-	-
650	XRV650	88-89	-	GTX14A-BS	CB14-B2	-
680	DN-01	01-09	YTZ14S	-	-	-
700	CB700SC	84-86	-	-	CB14L-A2	-
700	CB700SC Nighthawk ‘S	87	-	-	CB14L-A1	-
700	CTX700C,N	13-	YTZ12S	-	-	-
700	Integra	12-	YTZ12S	-	-	-
700	NC700	-	YTZ12S	-	-	-
700	NC700S, X, XD	01-12	YTZ12S	-	-	-
700	NT700V	01-10	YTZ14S	-	-	-
700	VF700C Magna	87	-	-	CB12A-A	-
700	VF700C Magna	84-86	-	GTX14A-BS	CB14-A2	-
700	VF700F Interceptor	84-85	-	GTX14A-BS	CB14-A2	-
700	VF700S Sabre	84-85	-	GTX14AL-BS	CB14L-A2	-
700	VFR700 F	86	-	-	CB12A-B	-
700	VFR700 Interceptor	86-87	-	-	CB12A-B	-
700	VFR700F, F II Interceptor	86-87	-	-	CB12A-B	-
700	VT700C Shadow	84-85	-	-	HCB16A-A	-
700	VT700C Shadow	86-87	-	GTX14A-BS	CB14-B2	-
700	XL700V	11-	YTZ14S	-	-	-
750	Africa Twin	93	-	GTX14A-BS	CB14-B2	-
750	CB750 F II	91-	-	-	CB14-A2	-

Объем	Модель	Год	High Performance AGM / Premium AGM	Maintenance Free	Heavy Duty	Conventional
HONDA продолжение						
750	CB750 KZ	80	-	-	CB14L-A2	-
750	CB750 Nighthawk	82-83	-	-	CB14L-A2	-
750	CB750 Nighthawk	91-03	-	GTX14A-BS	CB14-A2	-
750	CB750, C, F, F2	-88	-	-	CB14L-A2	-
750	CB750A	76-78	-	-	C50-N18L-A	-
750	CB750A Hondamatic	76-78	GTX24HL-BS	-	C50-N18L-A	-
750	CB750C Custom	80-82	-	GTX14AL-BS	CB14L-A2	-
750	CB750F Super Sport	75-82	-	GTX14AL-BS	CB14L-A2	-
750	CB750FA	93-95	-	-	CB14-A2	-
750	CB750K	-82	-	-	CB14L-A2	-
750	CB750K Four	69-82	-	GTX14AL-BS	CB14L-A2	12N14-3A
750	CB750K Limited Edition	79	-	GTX14AL-BS	CB14L-A2	-
750	CB750SC	84-85	-	-	CB14L-A2	-
750	CB750SC	91-92	-	-	CB14-A2	-
750	CB750SC Nighthawk	82-83	-	GTX14AL-BS	CB14L-A2	-
750	CBX750F	84-86	-	-	CB14-A2	-
750	CBX750F II	86	-	-	CB14-A2	-
750	CBX750P2	84-	-	-	CB14L-A1	-
750	CR750 45	-	-	GTX9-BS	-	-
750	NC750L		YTZ12S	-	-	-
750	NR	92	-	GTX12-BS	-	-
750	NV750, Shadow	97-98	YTZ14S	GTX14-BS	-	-
750	NV750 Shadow Slasher	01-	YTZ14S	-	-	-
750	RVF (RC45)	-	-	GTX14-BS	-	-
750	RVF750R (RC45)	94-95	-	GTX9-BS	-	-
750	VF750C	95-97	-	GTX12-BS	-	-
750	VF750C Magna	82-86	-	-	CB14-A2	-
750	VF750C Magna	87-92	-	-	CB12A-A	-
750	VF750C Magna	93-94	-	GTX9-BS	-	-
750	VF750C V45 Magna	88	-	-	CB12A-A	-
750	VF750C V45 Magna	82-83	-	GTX14A-BS	CB14-A2	-
750	VF750C, C2, D Magna	94-03	-	GTX12-BS	-	-
750	VF750F V45 Interceptor	83-84	-	GTX14A-BS	CB14-A2	-
750	VF750S V45 Sabre	82-83	-	-	CB14L-A2 (s)	-
750	VFR750F	87-89	-	GTX12-BS	-	-
750	VFR750F	90-97	-	GTX14A-BS	CB14-B2	-
750	VFR750F Interceptor	86	-	-	CB12A-B	-
750	VFR750R (RC30)	88-90	-	GTX9-BS	-	-
750	VT750	10-	YTZ14S	-	-	-
750	VT750 C	-	YTZ14S	-	-	-
750	VT750C Shadow	83	-	-	HCB16A-A	-
750	VT750C Shadow	98-00	-	GTX14-BS	-	-
750	VT750C, CA, C2	04-08	YTZ12S	-	-	-
750	VT750CD, CD2 Shadow Deluxe	98-02	-	GTX14-BS	-	-
750	VT750CDA, B, C, D Shadow, A.C.E. Deluxe	02-03	-	GTX14-BS	-	-
750	VT750DC, A, B Shadow Spirit	01-07	YTZ14S	-	-	-
750	VT750RS, C2B	01-10	YTZ14S	-	-	-
750	VT750S	10-	YTZ14S	-	-	-
750	XLV750R	83	-	-	CB14-A2	-
750	XRV750 African Twin	90-92	-	GTX14A-BS	CB14-B2	-
750	XRV750 African Twin	-	-	GTX14-BS	-	-
800	PC800 Pacific Coast	89-98	-	GTX12-BS	-	-
800	VFR800	01-	YTZ12S	-	-	-
800	VFR800, A Interceptor, ABS	02-12	YTZ12S	-	-	-
800	VFR800F I	02	YTZ12S	GTX12-BS	-	-
800	VFR800FI Interceptor	98-01	-	GTX12-BS	-	-
800	VFR800P	01-	YTZ14S	-	-	-
800	VFR800X	-	YTZ12S	-	-	-
800	VT800C Shadow	88	-	GTX14A-BS	CB14-B2	-
900	CB900 FZ80	-	-	-	CB14L-A2	-

* (s) При заказе этой батареи уточните наличие датчика.

Объем	Модель	Год	High Performance AGM / Premium AGM	Maintenance Free	Heavy Duty	Conventional
HONDA продолжение						
900	CB900C, F	80-82	-	GTX14AL-BS	CB14L-A2	-
900	CB900F Boldr	79-83	-	-	CB14L-A2	-
900	CB900F Hornet	02-	YTZ10S	-	-	-
900	CBR900RR FireBlade	00-02	YTZ10S	-	-	-
900	CBR900R, RR FireBlade	92-99	-	GTX9-BS	-	-
900	CBR929R	00-	YTZ10S	-	-	-
900	CBR954RR	01-	YTZ10S	-	-	-
919	CB900F (919)	02-06	YTZ10S	-	-	-
929	CBR929RR, RE	00-01	YTZ10S	-	-	-
954	CBR954RR	02-03	YTZ10S	-	-	-
1000	CB1000	94-95	-	GTX12-BS	-	-
1000	CB1000C Custom	83	-	GTX14AL-BS	CB14L-A2	-
1000	CB1000F	93-96	-	GTX12-BS	-	-
1000	CB1000FT	93-96	-	GTX12-BS	-	-
1000	CB1000R	01-09	YTZ10S	-	-	-
1000	CBF1000F	09-	YTZ10S	-	-	-
1000	CBR1000F Hurricane	87-96	-	GTX14AL-BS	CB14L-B2	-
1000	CBR1000RR	01-08	YTZ7S	-	-	-
1000	CBR1000RR (ABS)/RA	10-	YTZ10S	-	-	-
1000	CBR1000RR Fireblade	04-07	YTZ10S	-	-	-
1000	CBR1000RR Fireblade	07-	YTZ7S	-	-	-
1000	CBX1000	79	-	-	CB18L-A	-
1000	CBX1000 (Opt)	81	-	-	CB18L-A	-
1000	CBX1000 Super Sport	79-82	GTX20HL-BS	GTX20L-BS	CB18L-A	-
1000	CBX1000 Super Sport (Opt)	82	GTX24HL-BS	-	C50-N18L-A	-
1000	GL1000, LTD, K Gold Wing	75-79	GTX24HL-BS	-	C50-N18L-A	-
1000	RVT1000R RC51	00-06	YTZ12S	-	-	-
1000	VF1000F Boldr	85	-	-	CB16B-A	-
1000	VF1000F Interceptor	84-85	-	-	CB16B-A	-
1000	VF1000R, F	84-86	-	-	CB16B-A	-
1000	VTR1000 F	01-	YTZ12S	-	-	-
1000	VTR1000 F	97-00	-	GTX12-BS	-	-
1000	VTR1000F Super Hawk	01-05	YTZ12S	-	-	-
1000	VTR1000F Super Hawk	97-00	-	GTX12-BS	-	-
1000	VTR1000SP	00-	YTZ12S	-	-	-
1000	VTR1000SP II	04	-	GTX12-BS	-	-
1000	XL1000V Varadero	97-13	GTX20CH-BS	-	-	-
1100	CB1100, C, AC	10-12	YTZ14S	-	-	-
1100	CB1100F Boldr, R, R II	81-83	-	-	CB14L-A2	-
1100	CB1100F Super Sport	83	-	GTX14AL-BS	CB14L-A2	-
1100	CB1100SF	00-01	-	GTX12-BS	-	-
1100	CBR1100 XX	01-	YTZ12S	-	-	-
1100	CBR1100 XX Blackbird	97-00	-	GTX12-BS	-	-
1100	GL1100 Gold Wing	80-83	GTX24HL-BS	-	C50-N18L-A	-
1100	GL1100 I Interstate	80-83	-	-	C50-N18L-A	-
1100	GL1100, D Gold Wing	80-83	-	-	C50-N18L-A	-
1100	GL1100A Aspencade	80-83	-	-	C50-N18L-A	-
1100	ST1100, A Police, Pan Eur.	90-	-	GTX14-BS	-	-
1100	ST1100, ABS-TCS, 1100A	91-'02	GTX14H-BS	GTX14-BS	-	-
1100	VF1100C V65 Magna	83-86	GTX20H-BS	GTX20-BS	CB18-A	-
1100	VF1100S V65 Sabre	84-85	GTX20HL-BS	GTX20L-BS	CB18L-A	-
1100	VT1100 C II	95-00	-	-	HCB16A-A	-
1100	VT1100 C, C II Shadow	85-96	-	-	HCB16A-A	-
1100	VT1100 C2 Shadow Sabre	00-04	-	GTX14-BS	-	-
1100	VT1100C Shadow Spirit	85-97	YTZ14S	-	HCB16A-A	-
1100	VT1100C, C3, T Shadow (Spirit, Aero, A. C. E. Tourer)	98-00	YTZ14S	-	HCB16A-A	-
1100	VT1100C, C3, T Shadow (Spirit, Aero, A. C. E. Tourer)	01-07	-	GTX14A-BS / GTX14-BS	-	-
1100	VT1100C2 Shadow A. C. E.	95-99	YTZ14S	-	HCB16A-A	-

Объем	Модель	Год	High Performance AGM / Premium AGM	Maintenance Free	Heavy Duty	Conventional
HONDA продолжение						
1100	VT1100C2 Shadow Sabre	00-07	-	GTX14-BS	-	-
1200	GL1200 Aspencade	84-87	-	-	C50-N18L-A	-
1200	GL1200 Gold Wing	84-87	GTX24HL-BS	-	C50-N18L-A	-
1200	GL1200 I/A	86-87	-	-	C50-N18L-A	-
1200	GL1200 SEI	86	-	-	C50-N18L-A	-
1200	VFR1200F, FD, X	01-10	YTZ14S	-	-	-
1200	CB1300A/SA	-	YTZ14S	-	-	-
1300	CB1300 Super Four	01-01	YTZ14S	-	-	-
1300	CB1300DC X4 Type LD	01-	-	GTX14-BS	-	-
1300	CTX1300	-	YTZ14S	-	-	-
1300	Pan-European	04	YTZ14S	-	-	-
1300	ST1300	09-	YTZ14S	-	-	-
1300	ST1300, A, P, ABS	01-03	YTZ14S	-	-	-
1300	STX1300	03-12	YTZ14S	-	-	-
1300	VT1300CS, CR, CT, CXA FURY	01-09	YTZ14S	-	-	-
1300	VTX1300C, S Retro	03-12	-	GTX14-BS	-	-
1300	VTX1300R, S, C	05	-	GTX14-BS	-	-
1300	X4	-	-	GTX14-BS	-	-
1500	GL1500 A Aspencade	95-97	-	-	C50-N18L-A3	-
1500	GL1500 C (F6C)	-	-	GTX14-BS	-	-
1500	GL1500 Gold Wing	88-00	GTX24HL-BS	-	C50-N18L-A3	-
1500	GL1500 I Gold Wing Inter.	91-96	-	-	C50-N18L-A3	-
1500	GL1500 SE Gold Wing SE	91-00	-	-	C50-N18L-A3	-
1500	GL1500 Valkyrie	97-03	GTX14H-BS	GTX14-BS	-	-
1800	GL1800 Gold Wing	01-08	-	GTX20L-BS	-	-
1800	GL1800A Gold Wing	01-08	-	GTX20L-BS	-	-
1800	NRX1800 Valkyrie Rune	04-05	-	GTX20L-BS	-	-
1800	VTX1800C, F, N, R Retro, S	02-07	GTX20HL-BS	GTX20L-BS	-	-
HUSABERG						
50	All Electric Start Models	01-02	-	GTX5L-BS	-	-
50	All Electric Start Models	97-00	-	GTX9-BS	-	-
450	FE450e/6	-	YTZ7S	-	-	-
450	FS450e/6	-	YTZ7S	-	-	-
550	FE550e/6	-	YTZ7S	-	-	-
650	FE650e/6	-	YTZ7S	-	-	-
650	FS650e/6	-	YTZ7S	-	-	-
HUSQUARNA						
125	125GT, GTL	-	-	-	-	6N11A-1B
125	GT125SP	-	-	-	-	12N5.5-3B
250	TE-SM	05	YTZ7S	-	-	-
350	Scrambler Elettronica	-	-	-	-	12N5.5-3B
450	TE-SM	05	YTZ7S	-	-	-
510	TE-SM	05	YTZ7S	-	-	-
750	Aviamento, GT	-	-	-	53030	-
800	S, SS	-	-	-	C60-N24L-A	-
900	GT	-	-	-	C60-N24L-A	-
900	NUDA900	12-	-	GTX14-BS	-	-
900	NUDA900R	12-	-	GTX14-BS	-	-
1100	Grand Prix	-	-	-	C60-N24L-A	-
HYOSUNG MOTORS						
50	SB Super Cab, SD50 Sense	All	-	GTX4L-BS	-	-
50	SF50 Prima, Rally, Sense	All	-	GTX4L-BS	-	-
100	EZ100	All	YTZ7S	GTX5L-BS	-	-
125	XRX125	All	-	GTX7A-BS	-	-
250	NS3-250	09-12	-	GTX9-BS	-	-

Объем	Модель	Год	High Performance AGM / Premium AGM	Maintenance Free	Heavy Duty	Conventional
INDIAN						
1442	Scout, Spirit	02-03	GTX20H-BS	GTX20-BS	-	-
1638	Chief	02-03	GTX24HL-BS	-	-	-
	All Models	99-01	GTX20H-BS	GTX20-BS	-	-
INNOCENTI						
125	Lambretta LI/DL	-	-	-	-	6N11A-3A
150	Lambretta LI/DL	-	-	-	-	6N11A-3A
175	Lambretta LI/DL	-	-	-	-	6N11A-3A
175	Lambro FL1	-	-	-	C60-N24L-A	-
200	Lambro FL1	-	-	-	C60-N24L-A	-
450	Lambro	-	-	-	C60-N24L-A	-
550	Lambro	-	-	-	C60-N24L-A	-
600	Lambro	-	-	-	C60-N24L-A	-
ITALJET						
50	Adly	-	-	-	CB5L-B	-
50	Bazooka, 2	-	-	-	CB4L-B	-
50	Cruise	-	-	-	CB4L-B	-
50	Dragster	97	-	-	CB4L-B	-
50	Formula	95-	-	-	CB4L-B	-
50	Pista	-	-	-	CB4L-B	-
50	Reporter	-	-	-	CB4L-B	-
50	Scoop	-	-	-	CB4L-B	-
50	Torpedo	97-	-	-	CB4L-B	-
50	Velocifero	95-	-	-	CB4L-B	-
125	Dragster	99	-	-	CB10L-B	-
125	Formula	97-	-	-	CB9-B	-
125	Millenium	-	-	GTX7A-BS	-	-
125	Torpedo	99	-	-	CB9-B	-
150	Millenium	-	-	GTX7A-BS	-	-
150	Torpedo	-	-	-	CB9-B	-
180	Dragster	99	-	GTX14-BS	-	-
JAWA						
180	360, 361	-	-	-	-	B38-6A
180	623, 633	-	-	-	-	B38-6A
JIA LING HONDA						
125	CB125T,X	-	-	-	-	12N9-4B-1
125	CG125	-	-	-	-	12N9-4B-1
125	CH125	-	-	-	-	12N9-4B-1
125	CM125	-	-	-	-	12N9-4B-1
JIALING MOTOR						
90	JH90	-	-	-	CB5L-B	-
125	JH125	-	-	-	-	12N7-4B
125	JH125D	-	-	-	-	12N7-3B
150	JH150T	-	-	GTX7A-BS	-	-
JIANGMEN DIHAO						
100	HN100	-	-	-	CB5L-B	-
100	110-4, 6	-	-	-	CB5L-B	-
125	HN125-3	-	-	-	-	12N9-4B-1
125	HN125-4F	-	-	-	CB7-A	-
125	HN125T	-	-	GTX7A-BS	-	-
125	125T-2C	-	-	GTX9-BS	-	-
125	125T-A, B, C, D	-	-	GTX7A-BS	-	-
125	CG125-4, 4A, 9, 9A	-	-	-	CB9L-A2	-

Объем	Модель	Год	High Performance AGM / Premium AGM	Maintenance Free	Heavy Duty	Conventional
JIANGMEN DIHAO продолжение						
125	CG125-7	-	-	-	-	12N9-4B-1
125	HN125-3A	-	-	-	CB9L-A2	-
150	150-2	-	-	-	-	12N7A-3A
150	150-6, 7, 8	-	-	-	-	12N9-4B-1
150	150J-5A, 8A	-	-	-	-	12N9-4B-1
150	CG150-3	-	-	GTX7L-BS	-	-
JIANSHE YAMAHA						
90	JYM90	-	-	GT4L-BS	-	-
100	5WY	-	-	GTX5L-BS	-	-
100	JOG	-	-	GTX5L-BS	-	-
125	27S	-	-	GTX7L-BS	-	-
125	4KL	-	-	GTX7A-BS	-	-
125	JYM125	-	-	-	CB5L-B	-
125	3D92	-	-	GTX7L-BS	-	-
-	5WG	-	-	GTX7A-BS	-	-
-	4FP	-	-	GTX7A-BS	-	-
JINAN SUZUKI						
100	QS100TB	-	-	GTX7A-BS	-	-
110	GM110	-	-	-	CB5L-B	-
110	QS110L.QS110LS.QS110F	-	-	-	CB5L-B	-
110	FD110	-	-	-	CB5L-B	-
125	QS125-3B.GS125GC	-	-	-	-	12N7-4A
125	QS125-5.QS125-5C	-	-	-	-	12N7A-3A
125	QS125T-2	-	-	GTX7A-BS	-	-
125	GS125	-	-	-	CB7-A	-
125	GS125-4K	-	-	GTX7A-BS	-	-
125	GSX125	-	-	-	-	12N7-4A
125	GT125	-	-	-	-	12N7A-3A
125	GZ125	-	-	GTX7L-BS	-	-
150	QS150TFB	-	-	GTX7A-BS	-	-
JINCHERG GROUP						
110	SJ110	-	-	-	CB5L-B	-
125	SJ125	-	-	GTX7L-BS	-	-
125	JC125T-17	-	-	GTX12-BS	-	-
250	JC250	-	-	GTX9-BS	-	-
KASEA						
50	Sense, Prima	All	-	GTX5L-BS	-	-
125	RX125	All	-	GTX7A-BS	-	-
KAWASAKI						
50	AE50 A1, AR50 A1	-92	-	-	-	6N6-1D-2
50	AE50	-	-	-	-	6N6-1D-2
50	AR50 C2-C4	-	-	-	CB12A-A	-
50	AR50 C5 (EU)	-	-	-	CB12A-A	-
50	AR50 C5 (GR, UK)	-	-	-	-	6N6-3B-1
50	AR50 C6-C10	-	-	-	-	6N6-1D-2
50	AV50	-92	-	-	-	6N6-1D-2
50	KMX50A	88-	-	-	-	6N6-1D-2
50	MX50A	-95	-	-	-	6N6-1D-2
80	AE80, AR80A	-98	-	-	-	6N6-1D-2
80	AR80 C2-C8	-	-	-	-	6N6-1D-2
80	KMX80	88-	-	-	-	6N6-1D-2
90	AN90B	-95	-	-	-	12N5.5A-3B
90	G3SS Series	69-72	-	-	-	6N4-2A-3
90	G3SS Series	73-74	-	-	-	6N4-2A-5

Объем	Модель	Год	High Performance AGM / Premium AGM	Maintenance Free	Heavy Duty	Conventional
KAWASAKI продолжение						
90	G3TR Series	69-70	-	-	-	6N4-2A-3*
90	MC1 Series	73-75	-	-	-	6N4-2A-5
100	G3SS Series	75	-	-	-	6N4-2A-5
100	G3TR Series	71	-	-	-	6N4-2A-3*
100	G4TR Series	70-72	-	-	-	6N2-2A-3
100	G4TR Series	73-75	-	-	-	6N4-2A-5
100	G5 Series	72-73	-	-	-	6N4-2A-3
100	G5 Series	74-75	-	-	-	6N4-2A-5
100	KE100 B16-B17	82-	-	-	-	6N6-1D-2
100	KE100, B1-B15 (EU)	-	-	-	-	6N4-2A-5
100	KE100A, KM100A	76-78	-	-	-	6N4-2A-5
100	KE100A, KM100A	79-81	-	-	-	6N6-1D-2
100	KE100-B	82-01	-	-	-	6N6-1D-2
100	KH100 G5-G8	-	-	-	-	6N6-3B-1
100	KH100-B	76-77	-	-	-	6N4-2A-5
100	KH100H	-95	-	-	-	6N6-3B-1
100	KM100	-92	-	-	-	6N6-1D-2
100	KM100-A	76-78	-	-	-	6N4-2A-5
100	KM100-A	79-81	-	-	-	6N6-1D-2
100	KV100-A	76	-	-	-	6N4-2A-5
110	KSR110	05-	GTX4L-BS	GT4L-BS	-	-
120	C2SS RoadRunner	67-69	-	-	-	6N4-2A-3
120	C2TR RoadRunner	67-69	-	-	-	6N4-2A-3
125	AR125 A1A-A8	-	-	-	-	12N5-3B
125	AR125 B1-B8	-	-	-	-	12N5-3B
125	AR125 S	-	-	-	-	12N5-3B
125	BN125	01-07	-	-	CB9-B	-
125	BN125 A1-A2 Eliminator	01-04	-	-	CB9-B	-
125	D-Tracker 125	09-	-	GTX7L-BS	-	-
125	F6 Series	71-73	-	-	-	6N4-2A-5
125	K125K	-94	-	-	-	6N6-3B-1
125	K125-K7	-94	-	-	CB3L-B	-
125	KDX125 A1-A4, SR	94-95	-	-	CB3L-A	-
125	KDX125 B1-B4	-	-	-	CB3L-A	-
125	KE125 A8-A12	-95	-	-	-	6N6-1D-2
125	KE125-A	76-83	-	-	-	6N6-1D-2
125	KH125 K1-K6	-	-	-	-	6N6-3B-1
125	KH125 K7, K10	-	-	-	CB3L-B	-
125	KH125 L1	-	-	-	-	6N6-3B-1
125	KLX125	-	-	GTX7L-BS	-	-
125	KMX125 A1-A8, A11	86-02	-	-	CB4L-B	-
125	KMX125 B1-B9	91-	-	-	CB4L-B	-
125	KS125 Series	74-75	-	-	-	6N6-1D-2
175	F7 Series	71-75	-	-	-	6N4-2A-5
175	KDX175 B	-92	-	-	-	6N4B-2A
175	KE175 B	76-78	-	-	-	6N6-1D-2
175	KE175 D, F	-92	-	-	-	6N6-1D-2
200	KDX200 B1-B2	-92	-	-	CB3L-A	-
200	KMX200 A2-A5	-97	-	-	CB4L-B	-
200	KZ200 A, C	-95	-	-	CB10L-B	-
250	250TR (BJ250F)	02-	-	GTX7L-BS	-	-
250	A1 Series	66-71	-	-	CB9-B	12N9-4B-1
250	D-Tracker (LX250E)	02-	-	GTX7L-BS	-	-
250	EL250 A, B, C Eliminator	91-96	-	GTX7L-BS	-	-
250	EL250 D, E, F	-	-	-	CB9L-A2	-
250	EL250, HS	88-93	-	-	CB9L-A2	-
250	EL252	96-02	-	-	CB9L-A2	-
250	ER250 A	-95	-	-	CB9L-B	-
250	ER250 B2-B3	83-84	-	-	CB9L-B	-
250	Estrella-BJ250 A2, A3, C2, C3	92-	-	GTX9-BS	-	-

* Для двигателей 235611 и выше используйте 6N4-2A-5.

МОЩНАЯ И ВЫСОКОПРОИЗВОДИТЕЛЬНАЯ ЛИНЕЙКА ОТ GS

Объем	Модель	Год	High Performance AGM / Premium AGM	Maintenance Free	Heavy Duty	Conventional
KAWASAKI продолжение						
250	EX250 Ninja	86-94	-	-	CB9L-A2	-
250	EX250 Ninja	95-07	-	GTX7L-BS	-	-
250	EX250 Ninja 250R	08-	-	GTX7A-BS	-	-
250	EX250 Ninja 250R	01-09	-	GTX9-BS	-	-
250	F4 Series	69-70	-	-	-	12N5.5-4A
250	F8 Series	71-72	-	-	-	6N2-2A-3
250	F11 Series	73-75	-	-	-	6N4B-2A-3
250	GPX250R EX250 F2-F8	87-	-	-	CB9L-A2	-
250	GPX250R-II (EX250G1)	88-	-	-	CB9L-A2	-
250	GPZ250 EX250H1-H4	83-	-	-	CB9L-A2	-
250	GPZ250R EX250 F9-F13	95-	-	GTX7L-BS	-	-
250	GPZ250R EX250 H5-H9	95-	-	GTX7L-BS	-	-
250	KE250 B	77-79	-	-	-	6N6-1D-2
250	KH250 A	77	-	-	-	12N5.5-4A
250	KH250 B	76-77	-	-	-	12N5.5-3B
250	KH250-A	76	-	-	-	12N5.5-4A
250	KL250	78-84	-	-	-	6N6-1D-2
250	KL250 A	78-82	-	-	-	6N6-1D-2
250	KL250 D2-D16	-	-	-	CB4L-B	-
250	KL250 Super Sherpa	00-04	-	GTX7L-BS	-	-
250	KL250C	83-84	-	-	-	6N6-1D-2
250	KL250-D KLR	85-05	-	-	CB4L-A	-
250	KL250G, H Super Sherpa	00-04	-	GTX7L-BS	-	-
250	KLE250 Anhelo (LE250A)	-97	-	GTX7L-BS	-	-
250	KLR250 D-KL250D	85-04	-	-	CB4L-A	-
250	KLX250 B	82-83	-	-	-	6N4B-2A
250	KLX250ES G1/G2	94-95	-	GTX7L-BS	-	-
250	KLX250S, SF	01-06	-	GTX7L-BS	-	-
250	KR250 B, C, KR, 1S	-92	-	-	CB4L-B	-
250	KZ250 A	79-82	-	-	CB10L-A2	-
250	KZ250 CSR, LTD	80-83	-	-	CB10L-A2	-
250	KZ250 W LTD	83-95	-	-	CB10L-A2	-
250	KZ250C	80-82	-	-	CB10L-A2	-
250	KZ250D LTD	80	-	-	CB10L-A2	-
250	KZ250G LTD	81-82	-	-	CB10L-A2	-
250	KZ250L CSR	82	-	-	CB10L-A2	-
250	LTD250	80-81	-	-	CB10L-A2	-
250	LX250 G, F	95	-	-	CB10L-A2	-
250	Ninja 250	13-	-	GTX9-BS	-	-
250	S1 Series	73-75	-	-	-	12N5.5-4A
250	Z250 A, C, J, LTD	-92	-	-	CB10L-A2	-
250	Z250 GP C1	81	-	-	CB9L-A2	-
250	Z250	13-	-	GTX9-BS	-	-
250	ZR250A, B Balius	91-	-	GTX7L-BS	-	-
250	ZXR250, R (ZX250A, C)	90-	-	-	CB9L-A2	-
250	ZZ-R (EX250H)	90-93	-	-	CB9L-A2	-
250	ZZ-R (EX250H)	99-02	-	GTX7L-BS	-	-
305	EX305 A1, B GP	83	-	-	CB9L-A2	-
305	GPZ305	83	-	-	CB9L-A2	-
305	KZ305 A CSR, LTD	81-88	-	-	CB10L-A2	-
305	KZ305B CSR	82	-	-	CB10L-A2	-
305	KZ305B LTD	87-88	-	-	CB10L-A2	-
305	LTD305	87	-	-	CB10L-A2	-
305	Z305 (CSR305)	88	-	-	CB10L-A2	-
350	A7 Series	66-71	-	-	CB9-B	12N9-4B-1
350	F5 Series	70-71	-	-	-	6N2-2A-3
350	F9 Series	72	-	-	-	6N2-2A-3
350	F9 Series	73-75	-	-	-	6N4B-2A-3
350	S2 Series	72-73	-	-	-	12N5.5-4A
400	400 KH400-A	76-78	-	-	-	12N5.5-4A

Объем	Модель	Год	High Performance AGM / Premium AGM	Maintenance Free	Heavy Duty	Conventional
KAWASAKI продолжение						
400	EN400, -Twin	94	-	-	CB12A-A	-
400	EN400B Vulcan	95	-	-	CB12A-A	-
400	ER-4n, ABS	10-	-	GTX7L-BS	-	-
400	EX4 (EX400 A2/A3, B)	94	-	-	CB14L-A2	-
400	FX400R (ZX400A)	-	-	-	CB12A-A	-
400	KH400	92	-	-	-	12N5.5-3B
400	KH400A	76-78	-	-	-	12N5.5-4A
400	KLE400 (LE400A)	91-	-	GTX12-BS	-	-
400	KLX400R, KLX400SR	03-04	-	GT7B-BS	-	-
400	KX400H	79	-	-	CB12A-A	-
400	KZ400 Deluxe	77-79	-	-	CB12A-A	12N12A-4A-1
400	KZ400A Deluxe	77-78	-	-	-	12N12A-4A-1
400	KZ400-aS	75-77	-	-	-	12N5.5-4A
400	KZ400C, S	75-	-	-	-	12N5.5-4A
400	KZ400-D, H	74-79	-	-	CB12A-A	12N12A-4A-1
400	KZ400J	80-82	-	-	CB12A-A	-
400	Mach II	-	-	-	-	12N5.5-4B
400	March	-	-	-	-	12N5.5-4A
400	Ninja 400R, ABS	10-	-	GTX12-BS	-	-
400	S3 Series	74-75	-	-	-	12N5.5-4A
400	VN400A, C Vulcan	95-	-	GTX12-BS	-	-
400	Z400 Custom (KZ400B)	78-	-	-	CB12A-A	-
400	Z400LTD, -II, (KZ400H, K)	-	-	-	CB12A-A	12N12A-4A-1
400	ZR400C, G Zephyr	93-	-	GTX12-BS	-	-
400	ZR400D Xanthus	92-	-	GTX9-BS	-	-
400	ZRX, -II (ZR400E, F, D)	95-	-	GTX9-BS	-	-
400	ZX400H	92	-	-	CB12A-A	-
400	ZXR400, R (ZX400M, L)	92-02	-	GTX9-BS	-	-
400	ZZ-R400 (ZX400N)	93-	-	GTX12-BS	-	-
440	KZ440 (All)	80-84	-	-	CB12A-A	-
440	LTD440	80-	-	-	CB12A-A	-
450	EN450-A 454 LTD	85-90	-	-	CB12A-A	-
450	KLX450R	08-10	YTZ7S	-	-	-
450	Z450 LTD	87-89	-	-	CB12A-A	-
500	EN500 LTD	90-95	-	-	CB12A-A	-
500	EN500-A Vulcan	90-96	-	-	CB12A-A	-
500	EN500-C Vulcan LTD	96-08	-	-	CB12AL-A2	-
500	EN500D Ninja 500R	94-04	-	-	CB14L-A2	-
500	ER5 (ER500A, B)	97-	-	GTX12-BS	-	-
500	ER525KW	97-01	-	GTX12-BS	-	-
500	ER537KW	97-01	-	GTX12-BS	-	-
500	EX500	87-98	-	-	CB14L-A2	-
500	EX500-A	87-93	-	GTX14AL-BS	CB14L-A2	-
500	EX500-D Ninja 500R	94-08	-	GTX14AL-BS	CB14L-A2	-
500	GPZ500S (EN500D, E, F)	87-02	-	-	CB14L-A2	-
500	H1 Series	69-72	-	-	CB9-B	12N9-4B-1
500	H1 Series	73-75	-	-	CB9L-B	12N9-3B
500	KH500-A	76	-	-	CB9L-B	12N9-3B
500	KLE500 (LE500)	91-02	-	GTX12-BS	-	-
500	KZ500B	79-80	-	-	CB12A-A	-
550	GPZ550	82-87	-	-	CB12A-A	-
550	GT550	89-93	-	-	CB12A-A	-
550	KZ550, LTD, GP	80-83	-	-	CB12A-A	-
550	KZ550B, G, LTD, GP	79-89	-	-	CB12A-A	-
550	KZ550-F LTD	84	-	-	CB12A-A (ta)	-
550	KZ550-F Spectre	83	-	-	CB12A-A (ta)	-
550	KZ550-H GP	82-83	-	-	CB12A-A (s)	-
550	LTD550 C1	80	-	-	CB12A-A	-
550	LTD550 C2	81	-	-	CB12A-A	-
550	LTD550 C3	82	-	-	CB12A-A	-

* (ta) При заказе этой батареи уточните наличие адаптера клемм.
* (s) При заказе этой батареи уточните наличие датчика.

Объем	Модель	Год	High Performance AGM / Premium AGM	Maintenance Free	Heavy Duty	Conventional
KAWASAKI продолжение						
550	LTD550 C4	83	-	-	CB12A-A	-
550	VLE500A	91	-	GTX12-BS	-	-
550	ZR550A	83	-	-	CB12A-A	-
550	ZR550B Zephyr	94-97	-	GTX12-BS	-	-
550	ZR550B Zephyr	90-93	-	-	CB12A-A	-
550	ZZ-R500 Ninja (ZX500D)	-98	-	GTX12-BS	-	-
600	GPX600C Warbird	88-94	-	-	CB12A-A	-
600	GPZ600R (ZX600A)	87-88	-	-	CB12A-A	-
600	KL600A KLR (Kick-Starter)	89-90	-	-	CB4L-B	-
600	KL600A KLR (Kick-Starter)	90-91	-	-	CB4L-A	-
600	KL600-B KLR	85-86	-	GTX14AL-BS	CB14L-A2	-
600	KL600R, KLR600 (KL600B)	85-88	-	-	CB14L-A2	-
600	ZL600A Eliminator	86-87	-	-	CB12A-A	-
600	ZX600 G/H/R	95-97	-	GTX12-BS	-	-
600	ZX600-A, B, C, D Ninja	85-96	-	-	CB12A-A	-
600	ZX600D ZZR	90-92	-	-	CB12A-A	-
600	ZX600E ZZR Ninja	93-02	-	GTX12-BS	-	-
600	ZX600-E, F Ninja ZX-6, 6R	93-02	-	GTX12-BS	-	-
600	ZX600F ZX-6R Ninja	95-98	-	GTX12-BS	-	-
600	ZX600-FA Ninja ZX-6R	08-’12	-	GTX9-BS	-	-
600	ZX600-G, J Ninja ZX-6R	98-08	-	GTX9-BS	-	-
600	ZX600-K, M, N Ninja ZX-6RR	03-06	-	GTX9-BS	-	-
600	ZX-6R Ninja (ZX636A)	03-	-	GTX9-BS	-	-
600	ZZR600	05-08	-	GTX9-BS	-	-
600	ZZR600	02-04	-	GTX12-BS	-	-
600	ZZR600	98-02	-	GTX9-BS	-	-
636	ZX636-B, C Ninja ZX-6R, ABS	01-03	-	GTX9-BS	-	-
650	EJ650	99-00	-	GTX14-BS	-	-
650	ER6, F, N	06	-	GTX12-BS	-	-
650	ER6n	09-’12	-	GTX12-BS	-	-
650	ER650-A, B	06	-	GTX12-BS	-	-
650	EX650-A, B	06	-	GTX12-BS	-	-
650	GPZ650R	92	-	-	CB12A-A	-
650	KL650-A, E, KLR	87-13	-	GTX14AL-BS	CB14L-A2	-
650	KL650-B Tengai	90-91	-	GTX14AL-BS	CB14L-A2	-
650	KLE650, A, B (Versys)	01-08	-	GTX12-BS	-	-
650	KLR650 (KL650A)	87-91	-	-	CB14L-A2	-
650	KLR650C	95-02	-	-	CB14L-A2	-
650	KLX650C, R	93-96	-	GTX9-BS	-	-
650	KLX650 (LX650C)	93-95	-	GTX9-BS	-	-
650	KZ650 SR, LTD, Custom	77-80	-	-	CB10L-A2	-
650	KZ650B	77-78	-	-	CB10L-A2	-
650	KZ650C, D SR, E LTD, F	78-83	-	-	CB10L-A2	-
650	KZ650-H CSR	81-83	-	-	CB12A-A	-
650	Ninja 650R, Ninja 650R ABS	01-06	-	GTX12-BS	-	-
650	Tengai	-	-	-	CB14L-A2	-
650	W Series	66-70	-	-	CB7L-B	12N7-3B
650	W650	00-02	-	GTX14-BS	-	-
650	Z650 SR	77-79	-	-	CB10L-A2	-
650	Z650B1/B2/ZBSR	-	-	-	CB10L-A2	-
700	KZ700-A	84	-	-	CB12A-A	-
700	VN700-A Vulcan	85	-	GTX14AL-BS	CB14L-A2	-
700	ZN700 LTD (ZN700A)	95	-	-	CB14L-A2	-
700	ZN700-A LTD	84-85	-	GTX14AL-BS	CB14L-A2	-
750	GPX750R (ZX750F)	87	-	-	CB14L-A2	-
750	GPZ750, F (ZX750A, E)	83-85	-	-	SCB14L-A2	-
750	GPZ750A, E, G	92	-	-	CB14L-A2	-
750	GPZ750R	92	-	-	CB12A-A	-
750	GPZ750R Ninja (ZX750G)	85	-	-	CB14L-A2	-
750	GT750	92	-	-	SCB14L-A2	-

Объем	Модель	Год	High Performance AGM / Premium AGM	Maintenance Free	Heavy Duty	Conventional
KAWASAKI продолжение						
750	H2 Series	72-75	-	-	-	12N5.5-4A
750	KZ750, LTD, CSR	76-79	-	-	SCB14L-A2	-
750	KZ750A	95	-	-	SCB14L-A2	-
750	KZ750B, G LTD	76-80	-	-	CB14L-A2	-
750	KZ750D	95	-	-	CB14L-A2	-
750	KZ750-E, H, L LTD	80-83	-	-	CB12A-A	-
750	KZ750-F LTD, Spectre	83	-	GTX14AL-BS	CB14L-A2	-
750	KZ750H LTD, L LTD, GP	80-83	-	-	CB12A-A	-
750	KZ750K LTD KI	83	-	-	CB14L-A2	-
750	KZ750K LTD, M CSR	82-84	-	-	SCB14L-A2	-
750	KZ750-L Ninja K	93	-	GTX9-BS	-	-
750	KZ750P GT	82-85	-	-	SCB14L-A2	-
750	KZ750-R GP	82	-	-	CB12A-A (s)	-
750	KZ750R L III-L IV	83-84	-	-	CB12A-A	-
750	KZ750Y LTD Y I-Y II	82-83	-	-	CB14L-A2	-
750	VN750-A Vulcan	86-06	-	GTX14AL-BS	CB14L-A2	-
750	Z750 (EU)	09-12	-	GTX9-BS	-	-
750	ZN750-A LTD	84-85	-	GTX14AL-BS	CB14L-A2	-
750	ZR-7, S (ZR750)	00-	-	GTX12-BS	-	-
750	ZR750 (Z750S)	05-06	-	GTX9-BS	-	-
750	ZR750-C Zephyr	91-94	-	GTX12-BS	-	-
750	ZR750C, D Zephyr F	99-02	-	GTX12-BS	-	-
750	ZX750 Ninja ZX, 7RR	91-97	-	GTX9-BS	-	-
750	ZX750-E Turbo, GPz	83-85	-	-	SCB14L-A2	-
750	ZX750-F Ninja	87-90	-	GTX14AL-BS	CB14L-A2	-
750	ZX750-H Ninja ZX-7	89	-	GTX14AL-BS	CB14L-A2	-
750	ZX750-H Ninja ZX-7	90	-	-	CB12AL-A2	-
750	ZX750H ZXR HI Stinger	89-92	-	-	CB14L-A2	-
750	ZX750-J Ninja ZX-7	91-95	-	GTX12-BS	-	-
750	ZX750-JI	91	-	-	CB12AL-A2	-
750	ZX750-P Ninja ZX-7R	96-03	-	GTX12-BS	-	-
750	ZX-7R, P Ninja	96-03	-	GTX12-BS	-	-
750	ZX-7RR Ninja	96-97	-	GTX9-BS	-	-
750	ZXR750 (ZX750H)	90	-	-	CB12AL-A2	-
750	ZXR750 (ZX750L)	91-93	-	GTX12-BS	-	-
750	ZXR750, R (ZX750J)	91-	-	GTX9-BS	-	-
750	ZXR750R (ZX750K, M)	91-	-	GTX12-BS	-	-
800	VN800 A	95-99	-	GTX14-BS	-	-
800	VN800 Classic B	96-02	-	GTX14-BS	-	-
800	VN800 D	99-02	-	GTX14-BS	-	-
800	VN800-A, B, C, E Vulcan, Classic, Drifter	95-03	-	GTX14-BS	-	-
800	VN800-A, B, E Vulcan, Classic, Drifter	04-06	-	GTX12-BS	-	-
800	W800, Special Edition	11-	-	GTX12-BS	-	-
800	Z800	13-	-	GTX9-BS	-	-
900	A4 900	-	-	-	CB10L-A2	-
900	GPZ900R (ZX900A)	84-93	-	-	CB14L-A2	-
900	KZ900, A, B, LTD	76-77	-	-	CB10L-A2	-
900	VN900, B, C, D	06	-	GTX12-BS	-	-
900	Vulcan 900 Classic	01-06	-	GTX12-BS	-	-
900	Z1 Series	73-75	-	GTX14AL-BS	CB14L-A2	12N14-3A
900	ZL900-A Eliminator	85-86	-	GTX14AL-BS	CB14L-A2	-
900	ZX900- E, F Ninja (ZX-9R)	00-03	-	GTX9-BS	-	-
900	ZX900-B Ninja (ZX-9R)	94-97	-	GTX12-BS	-	-
900	ZX900-C Ninja (ZX-9R)	98-99	-	GTX9-BS	-	-
900	ZX-9R (ZX900B) Ninja	94-97	-	GTX12-BS	-	-
900	ZX-9R (ZX900C, D) Ninja	98-02	-	GTX9-BS	-	-
900	ZX-9R (ZX900E, F) Ninja	00-03	-	GTX9-BS	-	-
1000	GPZ1000RX A	86-87	-	-	CB14L-A2	-
1000	GTR1000 (ZGT00A)	86-02	-	-	CB18L-A	-
1000	KZ1000 LTD K	81	-	-	CB18L-A	-

* (s) При заказе этой батареи уточните наличие датчика.

Объем	Модель	Год	High Performance AGM / Premium AGM	Maintenance Free	Heavy Duty	Conventional
KAWASAKI продолжение						
1000	KZ1000 R SS	81-83	-	-	CB18L-A	-
1000	KZ1000, LTD	77-80	-	GTX14AL-BS	CB14L-A2	-
1000	KZ1000, LTD, CSR	81-83	GTX20HL-BS	GTX20L-BS	CB18L-A	-
1000	KZ1000A	77-78	-	-	CB14L-A2	-
1000	KZ1000B LTD	77-78	-	-	CB14L-A2	-
1000	KZ1000-C Police	80-81	GTX20HL-BS	GTX20L-BS	CB16L-B	-
1000	KZ1000-C Police, Z1-R	78-79	-	GTX14AL-BS	CB14L-A2	-
1000	KZ1000-E ST, Shaft	79-80	GTX20HL-BS	GTX20L-BS	CB16L-B	-
1000	KZ1000-G Classic	80	-	GTX14AL-BS	CB14L-A2	-
1000	KZ1000J, M CSR	81-83	-	-	CB18L-A	-
1000	KZ1000P Police	02-05	-	GTX20L-BS	-	-
1000	KZ1000-P Police	82-01	GTX20HL-BS	GTX20L-BS	CB18L-A	-
1000	KZ1000-R Replica	82-83	GTX20HL-BS	GTX20L-BS	CB18L-A	-
1000	Z1000	01-03	-	GTX9-BS	-	-
1000	Z1000 MK2	79-80	-	-	CB14L-A2	-
1000	Z1000A, B, C, D, G	92	-	-	CB14L-A2	-
1000	Z1000GTR	92	-	-	CB18L-A	-
1000	Z1000J, K, LTD, R	92	-	-	CB18L-A	-
1000	Z1000ST	92	-	-	CB16L-B	-
1000	Z1-R (KZ1000D)	0.975	-	-	CB14L-A2	-
1000	ZG1000-A Concours	86-06	GTX20HL-BS	GTX20L-BS	CB18L-A	-
1000	ZGT1000A	95	-	-	CB18L-A	-
1000	ZL1000A Eliminator	87-92	-	GTX14AL-BS	CB14L-A2	-
1000	ZX10 B Tomcat	88-90	-	-	CB14L-A2	-
1000	ZX10 R	04	-	GT12B-BS	-	-
1000	ZX10R	01-11	YTZ7S	-	-	-
1000	ZX10R ABS	01-11	YTZ10S	-	-	-
1000	ZX1000A Concous	96-97	-	-	CB18L-A	-
1000	ZX1000-A Ninja 1000R, GPZ1000RX	86-87	-	GTX14AL-BS	CB14L-A2	-
1000	ZX1000-B Ninja ZX10	88-89	-	GTX14AL-BS	CB14L-A2	-
1000	ZX1000-C Ninja ZX-10R	04-09	-	GT12B-BS	-	-
1000	ZX1000-B Ninja (ZX-10)	88-89	-	GTX14AL-BS	CB14L-A2	-
1000	ZX1000-C Ninja (ZX-10R)	04-09	-	GT12B-BS	-	-
1000	ZX10R	86-90	-	GTX14AL-BS	CB14L-A2	-
1100	GPZ1100 (ZXT10 E, F)	95-97	-	GTX14-BS	-	-
1100	GPZ1100A Unitrak	83-85	-	-	CB16L-B	-
1100	KZ1100-A, LTD	81-83	GTX20HL-BS	GTX20L-BS	CB18L-A	-
1100	KZ1100-B GP	82	-	-	CB16L-B	-
1100	KZ1100D Spectre	82-83	-	-	CB18L-A	-
1100	KZ1100L LTD	83	-	-	CB18L-A	-
1100	Z1100B	-92	-	-	CB16L-B	-
1100	Z1100ST	81-83	-	-	CB18L-A	-
1100	Zephyr1100 (ZRT10A)	97-98	-	GTX16-BS	-	-
1100	ZG1100-A7, 8	94	-	-	CB18L-A	-
1100	ZN1100-B LTD	84-85	-	GTX14AL-BS	CB14L-A2	-
1100	ZR1100	92-95	GTX20CH-BS	GTX16-BS	-	-
1100	ZR1100A, B	92-97	-	GTX16-BS	-	-
1100	ZRX1100	99-00	GTX14H-BS	GTX14-BS	-	-
1100	ZRX1100/II (ZRT10C, D)	97-00	-	GTX14-BS	-	-
1100	ZX-11 (ZX1100C) Ninja	90-93	-	-	CB14L-A2	-
1100	ZX-11 (ZX1100D1) Ninja	94-98	-	GTX14-BS	-	-
1100	ZX1100 C-G	99	-	GTX14-BS	-	-
1100	ZX1100 D1	97-00	-	GTX14-BS	-	-
1100	ZX1100-A GPz	83-84	-	-	CB16L-B	-
1100	ZX1100-C Ninja ZX-11	90-93	-	GTX14AL-BS	CB14L-A2	-
1100	ZX1100-D Ninja ZX-11	95-01	-	GTX14-BS	-	-
1100	ZX1100-D Ninja ZX-11 (CN)	93-94	-	GTX14-BS	-	-
1100	ZX1100-E (GPz1100), ABS	95-97	-	GTX14-BS	-	-
1100	ZXR1100 C	97	-	GTX14-BS	-	-
1100	ZZR1100EU (ZXT10C)	90-92	-	-	CB14L-A2	-

Объем	Модель	Год	High Performance AGM / Premium AGM	Maintenance Free	Heavy Duty	Conventional
KAWASAKI продолжение						
1100	ZZR1100EU (ZXT10D)	93-01	-	GTX14-BS	-	-
1200	ZG1200 Voyager XII	86-03	-	-	SC50-N18L-AT	-
1200	ZG1200A, B Voyager	86-98	-	-	SC50-N18L-AT	-
1200	ZRX1200 DAEG	09-12	-	GTX12-BS	-	-
1200	ZRX1200R	01-05	GTX14H-BS	GTX14-BS	-	-
1200	ZRX1200R/S (ZRT20A/B)	01-	-	GTX14-BS	-	-
1200	ZX-1200A1	00-	-	GTX14-BS	-	-
1200	ZX-12R	00-05	GTX14H-BS	GTX14-BS	-	-
1200	ZZR1200 (ZXT20C)	02-05	GTX14H-BS	GTX14-BS	-	-
1300	KZ1300 Touring	79-82	-	-	C50-N18L-A	-
1300	KZ1300A	79-83	-	-	C50-N18L-A	-
1300	KZ1300B Touring	80	-	-	C50-N18L-A	-
1300	Z/ZG1300A	84-89	-	-	C50-N18L-A	-
1300	ZGT1300A	95-	-	-	C50-N18L-A	-
1300	ZN1300A Europe	83-92	-	-	C60-N24L-A	-
1400	1400GTR	07-	GTX14H-BS	-	-	-
1400	ZG1400 Concours, ABS	01-08	GTX14H-BS	GTX14-BS	-	-
1400	Ninja ZX-14R, ABS	01-06	GTX14H-BS	GTX14-BS	-	-
1400	ZZR1400	06-	GTX14H-BS	-	-	-
1500	VN1500 F, H	00-02	-	GTX16-BS	-	-
1500	VN1500 G1 Vulcan Nomad, Drifter	99-04	-	GTX16-BS	-	-
1500	VN1500 J1, 2	99-02	-	GTX16-BS	-	-
1500	VN1500 L, H, N	00	-	GTX16-BS	-	-
1500	VN1500 Vulcan 88, SE	87-98	-	-	C50-N18L-A	-
1500	VN1500A, C Vulcan	87-98	-	-	C50-N18L-A	-
1500	VN1500-C Vulcan L	96-97	-	-	C50-N18L-A	-
1500	VN1500-D, E, N Vulcan Classic	96-08	GTX20CH-BS	GTX16-BS	-	-
1500	VN1500-G, J, L, R, Vulcan Nomad, Drifter	99-05	GTX20CH-BS	GTX16-BS	-	-
1500	VN1500-P Vulcan Mean Streak	02-03	GTX20CH-BS	GTX16-BS	-	-
1500	VN1500SE B Vulcan	88-94	-	-	C50-N18L-A	-
1600	VN1600-A Vulcan Classic, D, Nomad	03-08	GTX20CH-BS	GTX16-BS	-	-
1600	VN1600-B Vulcan Mean Streak	04-08	GTX20CH-BS	GTX16-BS	-	-
1700	VN1700 Voyager	01-09	GTX20CH-BS	GTX16-BS	-	-
2000	VN2000-A Vulcan	04-12	GTX20CH-BS	GTX16-BS	-	-
KL-SHELUNG						
50	Club	-	-	GTX4L-BS	-	-
50	Racer	-	-	GTX4L-BS	-	-
KREIDLER						
80	Florett	-	-	-	CB7L-B	-
125	Mustang	-	-	-	CB7L-B	-
KTM						
50	GO, Go Chrono	95-	GTX4L-BS	GT4L-BS	-	-
50	Kross	-	-	-	CB4L-B	-
80	Chopper, PL	-	-	-	-	12N9-4B-1
80	RLW, RSL	-	-	-	-	12N9-4B-1
125	125LC2	96-97	GTX4L-BS	GT4L-BS	-	-
125	Duke	-	-	GTX7L-BS	-	-
125	Sting	97-98	GTX4L-BS	GT4L-BS	-	-
200	EXC	-	-	GTX4L-BS	-	-
200	Duke	-	-	GTX9-BS	-	-
250	EXC	05-	-	GTX4L-BS	-	-
250	EXC Six Days	-	-	GTX4L-BS	-	-
250	EXC-F	05-	-	GTX5L-BS	-	-
250	XC	-	-	GTX4L-BS	-	-
250	SX-F	-	-	GTX4L-BS	-	-

Объем	Модель	Год	High Performance AGM / Premium AGM	Maintenance Free	Heavy Duty	Conventional
KTM продолжение						
250	EXC-F	05-	-	GTX4L-BS	-	-
250	EXC-F Six Days	-	-	GTX4L-BS	-	-
250	XC-F	-	-	GTX4L-BS	-	-
300	EXC	-	-	GTX4L-BS	-	-
300	EXC Six Days	-	-	GTX4L-BS	-	-
300	XC	-	-	GTX4L-BS	-	-
350	Freeride	-	-	GTX5L-BS	-	-
350	XC-F	-	-	GTX5L-BS	-	-
350	EXC-F	-	-	GTX4L-BS	-	-
350	EXC-F Six Days	-	-	GTX4L-BS	-	-
350	SX-F	-	-	GTX4L-BS	-	-
390	Duke	13-	-	GTX9-BS	-	-
400	E/XC Racing 4-Stroke	00-02	-	GTX4L-BS	-	-
400	E/XC Racing 4-Stroke (Opt)	00-02	-	GTX5L-BS	-	-
400	EXC	-	-	GTX5L-BS	-	-
400	LC4	98	-	GTX9-BS	-	-
400	LC4 E/XC	96-98	-	GTX9-BS	-	-
400	LC4-E	97	-	GTX9-BS	-	-
400	LS-E	97	-	GTX9-BS	-	-
400	RXC LC4	96-01	-	GTX9-BS	-	-
400	XC-W	-	-	GTX5L-BS	-	-
450	EXC	-	-	GTX5L-BS	-	-
450	EXC Six Days	-	-	GTX5L-BS	-	-
450	MXC Racing	00-02	-	GTX5L-BS	-	-
450	SMR	-	-	GTX4L-BS	-	-
450	SX-F	-	-	GTX4L-BS	-	-
450	XC-F	-	-	GTX5L-BS	-	-
450	XC-W	-	-	GTX5L-BS	-	-
500	EXC	-	-	GTX5L-BS	-	-
500	EXC Six Days	-	-	GTX5L-BS	-	-
500	500K4, LC	-	-	-	CB9-B	-
520	E/XC, M/XC Racing 4-Stroke	00-02	-	GTX4L-BS	-	-
520	E/XC, M/XC Racing 4-Stroke (Opt)	00-02	-	GTX5L-BS	-	-
520	E/XC520 Racing 4S	00-	GTX4L-BS	GT4L-BS	-	-
525	MXC Racing	00-	-	GTX5L-BS	-	-
530	EXC	-	-	GTX5L-BS	-	-
530	XC-W	-	-	GTX5L-BS	-	-
550	LC	-	-	-	-	12N9-4B-1
620	Adventure, Duke, LC4	96-98	-	GTX9-BS	-	-
625	Adventure	03-	YTZ10S	-	-	-
625	Adventure R	00-	-	GTX9-BS	-	-
625	All SM	03-	YTZ10S	-	-	-
625	Supercomp	98	-	GTX9-BS	-	-
625	SXC	05-	YTZ10S	-	-	-
640	Adventurer, Duke, RXC LC4 Super Moto	99-02	-	GTX9-BS	-	-
640	Duke II	-99	-	GTX9-BS	-	-
640	Duke II Schwarz, LC4, Adventure	03-	YTZ10S	-	-	-
640	Duke, E	96-97	-	GTX9-BS	-	-
640	LC4	-99	-	GTX9-BS	-	-
640	LC4	03-	YTZ10S	-	-	-
690	Duke	-	YTZ10S	-	-	-
690	Euduro	-	YTZ10S	-	-	-
690	Euduro R	-	YTZ10S	-	-	-
690	Supermoto	-	YTZ10S	-	-	-
690	SMC	-	YTZ10S	-	-	-
690	SMC R	-	YTZ10S	-	-	-
950	Adventure	03-	YTZ14S	-	-	-
950	Superenduro	-	YTZ14S	-	-	-
950	Supermoto	03-	YTZ14S	-	-	-
990	Adventure, R, S	03-	YTZ14S	-	-	-

Объем	Модель	Год	High Performance AGM / Premium AGM	Maintenance Free	Heavy Duty	Conventional
KTM продолжение						
990	SM R, T	-	YTZ14S	-	-	-
990	Super Duke, R	03-	YTZ14S	-	-	-
990	Supermoto	-	YTZ14S	-	-	-
1190	Adventure, R	13-	YTZ14S	-	-	-
1190	RC8, R, Track	08	YTZ14S	-	-	-
1290	Super Duke	14-	-	GTX14-BS	-	-
-	EXC-F	05-	-	GTX5L-BS	-	-
KYMCO						
50	Agility 50	09-12	-	GTX7A-BS	-	-
50	Calypso50, Cobra, Cross	99	-	GTX5L-BS	-	-
50	CX/CX Super	00-	-	GTX4L-BS	-	-
50	CX50, -Curio, -Super	95-97	-	GTX4L-BS	-	-
50	Dink50/LC	99	-	GTX5L-BS	-	-
50	Dj50, Djw50, Djx50	97	GTX4L-BS	GT4L-BS	-	-
50	Dj50, Djw50, Djx50	98-	-	GTX4L-BS	-	-
50	Djy 50	-	-	GTX4L-BS	-	-
50	Fever ZX	00	-	GTX5L-BS	-	-
50	Filly 50	99	-	GTX5L-BS	-	-
50	Heroism	95-97	-	GTX4L-BS	-	-
50	JR	-	-	GTX5L-BS	-	-
50	K12	96-97	-	GTX4L-BS	-	-
50	KB	97	-	GTX4L-BS	-	-
50	People	00-	-	GTX5L-BS	-	-
50	People	09-12	YTZ7S	GTX5L-BS	-	-
50	People S (2T)	-	-	GTX4L-BS	-	-
50	People S (4T)	-	-	GTX7A-BS	-	-
50	Racer, Looping, People	99	-	GTX5L-BS	-	-
50	Scout	97	GTX4L-BS	GT4L-BS	-	-
50	Sniper/Sniper DD	00-	-	GTX4L-BS	-	-
50	Spacer	99	-	GTX5L-BS	-	-
50	Super 8, 9	99	-	GTX5L-BS	-	-
50	Super 8	09-12	-	GTX7A-BS	-	-
50	Super 9 (2T)	-	-	GTX4L-BS	-	-
50	Super 9 (4T)	-	-	GTX5L-BS	-	-
50	Top Boy	97	-	GTX5L-BS	-	-
50	Vitality	-	-	GTX5L-BS	-	-
50	Vitality (2T)	-	-	GTX4L-BS	-	-
50	Vitality (4T)	-	-	GTX5L-BS	-	-
50	ZX Fever	95-97	GTX4L-BS	GT4L-BS	-	-
50	Cherry 50	-	-	GTX5L-BS	-	-
50	Kiwi 50	-	-	GTX5L-BS	-	-
50	VJR 50 Fi	11-	-	GTX7A-BS	-	-
50	Many 50 Fi	11-	-	GTX7A-BS	-	-
50	Grand Dink	-	-	GTX4L-BS	-	-
50	Dink	-	-	GTX5L-BS	-	-
50	Dink II	-	-	GTX5L-BS	-	-
80	Filly 80	99	-	GTX5L-BS	-	-
100	AS100	99	-	GTX5L-BS	-	-
100	Caro 100	-	-	GTX7A-BS	-	-
100	KB	97	-	GTX5L-BS	-	-
100	Sonner 100	-	-	GTX7A-BS	-	-
100	Top Boy	97	-	GTX7A-BS	-	-
100	So Easy	-	-	GTX5L-BS	-	-
100	So Easy Fi	-	-	GTX7A-BS	-	-
100	VJR 100 Fi	-	-	GTX7A-BS	-	-
100	Many 100 Fi	-	-	GTX7A-BS	-	-
100	Cherry 100	-	-	GTX5L-BS	-	-
100	Cherry 100 Fi	11-	-	GTX7A-BS	-	-
100	JR 100	-	-	GTX7A-BS	-	-

Объем	Модель	Год	High Performance AGM / Premium AGM	Maintenance Free	Heavy Duty	Conventional
KYMCO продолжение						
100	JR 100 Fi	-	-	GTX7A-BS	-	-
100	Kiwi 100	-	-	GTX7A-BS	-	-
100	X Mode	11-	-	GTX7A-BS	-	-
110	VJR	11-	-	GTX7A-BS	-	-
110	Many	11-	-	GTX7A-BS	-	-
100	Easy 100	-	-	GTX5L-BS	-	-
100	Easy 100 Fi	-	-	GTX7A-BS	-	-
100	So Easy 100 Fi	-	-	GTX7A-BS	-	-
125	Agility 125	-12	YTZ7S*	GTX5L-BS	-	-
125	B&W125	99	-	GTX9-BS	-	-
125	Calypso 125	99	-	GTX9-BS	-	-
125	Dink/LX	97	-	GTX9-BS	-	-
125	Fox Hunt	96	-	GTX7A-BS	-	-
125	Heroism	95-96	-	GTX9-BS	-	-
125	Jockey 125	99	-	GTX7A-BS	-	-
125	K-XCT	-	-	GTX9-BS	-	-
125	Movie 125	99	-	GTX9-BS	-	-
125	People 125	00	-	GTX7A-BS	-	-
125	People S	-	-	GTX7A-BS	-	-
125	People GT	-	-	GT12A-BS	-	-
125	Spacer	99	-	GTX9-BS	-	-
125	Vivio	-	-	GTX9-BS	-	-
125	Zing	99	-	GTX7A-BS	-	-
125	Racing 125	-	-	GTX9-BS	-	-
125	Jockey 125	-	-	GTX7A-BS	-	-
125	Jockey 125 Fi	-	-	GTX9-BS	-	-
125	V1 125 Fi	11-	-	GTX7A-BS	-	-
125	G5 125	-	-	GTX9-BS	-	-
125	G5 125 Fi	11-	-	GTX9-BS	-	-
125	G6	-	-	GTX9-BS	-	-
125	VP 125	-	-	GTX7A-BS	-	-
125	VP 125 Fi	11-	YTZ10S	TTZ10S	-	-
125	GP 125	-	-	GTX7A-BS	-	-
125	GP 125 Fi	-	YTZ10S	TTZ10S	-	-
125	Herself	-	-	GTX7A-BS	-	-
125	Grand Dink	-	-	GTX9-BS	-	-
125	Dink II	-	-	GTX9-BS	-	-
125	Downtown	-	-	GT12A-BS	-	-
125	Quannon	-	-	GT7B-BS	-	-
150	B&W150	-	-	GTX9-BS	-	-
150	Dink	-	-	GTX9-BS	-	-
150	Dink/LX	97	-	GTX9-BS	-	-
150	Grand Dink	-	-	GTX9-BS	-	-
150	Fox Hunt	96	-	GTX7A-BS	-	-
150	Heroism	96	-	GTX9-BS	-	-
150	Movie	-	-	GTX9-BS	-	-
150	People	09-12	-	GTX7A-BS	-	-
150	Spacer	99	-	GTX9-BS	-	-
150	Vivio	-	-	GTX9-BS	-	-
150	Zing	99	-	GTX7A-BS	-	-
150	Racing 150	-	-	GTX9-BS	-	-
150	Racing 150 Fi	-	-	GTX12-BS	-	-
150	G5 150	-	-	GTX9-BS	-	-
150	G5 150 Fi	-	-	GTX9-BS	-	-
150	G6	-	-	GTX9-BS	-	-
150	V1 150 Fi	11-	-	GTX9-BS	-	-
150	EGO 150	-	-	GTX9-BS	-	-
150	Quannon 150	-	-	GT7B-BS	-	-
150	KTR 150	-	-	GT9B-BS	-	-
150	Hipster 150	-	-	GTX7A-BS	-	-

Объем	Модель	Год	High Performance AGM / Premium AGM	Maintenance Free	Heavy Duty	Conventional
KYMCO продолжение						
150	Super 8 150	09-12	-	GTX7A-BS	-	-
180	Dink 180i	-	-	GTX12-BS	-	-
180	Dink 180 Fi	-	-	GTX12-BS	-	-
180	Racing	-	-	GTX9-BS	-	-
180	Racing 180 Fi	12-	-	GT12A-BS	-	-
180	Racing King	-	-	GTX9-BS	-	-
200	Dink II	-	-	GT12A-BS	-	-
200	Downtown	-	-	GT12A-BS	-	-
200	Grand Dink	-	-	GT12A-BS	-	-
200	People S	-	YTZ10S	TTZ10S	-	-
200	People GT	-	-	GT12A-BS	-	-
250	B&W250	-	-	GTX12-BS	-	-
250	Dink 250	-	-	GTX12-BS	-	-
250	People 250	-	-	GTX12-BS	-	-
250	People S	-	-	GTX12-BS	-	-
250	Super-9	00	-	GTX12-BS	-	-
250	Xciting 250i	-	-	GTX12-BS	-	-
250	Xciting 250 Fi	-	-	GTX12-BS	-	-
250	YUP 250	-	-	GTX12-BS	-	-
250	EGO 250	-	-	GTX12-BS	-	-
250	Venox 250i	-	-	GTX9-BS	-	-
250	Venox 250 Fi	-	-	GTX9-BS	-	-
250	Xciting	-	-	GTX12-BS	-	-
250	Grand Dink	-	-	GTX12-BS	-	-
250	Venox	-	-	GTX9-BS	-	-
300	Downtown 300	-12	-	GTX12-BS	-	-
300	Grand Dink	-	-	GT12A-BS	-	-
300	K-XCT	-	-	GT12A-BS	-	-
300	Nikita 300 Fi	11-	-	GT12A-BS	-	-
300	People GT	-	-	GT12A-BS	-	-
300	Xciting	-	-	GTX12-BS	-	-
300	Downtown	-	-	GT12A-BS	-	-
400	Xciting	-	-	GTX14-BS	-	-
500	Xciting	-	-	GTX14-BS	-	-
500	Xciting 500i	09-12	-	GTX14-BS	-	-
500	Xciting 500Fi	-	-	GTX14-BS	-	-
700	My road	-	-	GTX14-BS	-	-
LAVERDA						
125	125LB	-	-	-	-	12N5.5-3B
125	125LZ (Zundapp)	-	-	-	-	6N11A-1B
125	CU Rider	-	-	-	-	12N5.5-3B
125	GS Lesmo	-	-	-	-	12N5.5-3B
150	Phoenix	-	-	GTX9-BS	-	-
200	Phoenix	-	-	GTX9-BS	-	-
350	350	-	-	-	52515	-
500	500	-	-	-	52515	-
600	OR Atlas	-	-	-	CB14L-A2	-
650	Ghost, Strike	-	-	-	CB14L-A2	-
668	Diamante, Ghost	-99	-	-	51814	-
668	Ghost Legend, Strike	-99	-	-	51814	-
750	750GTL, SFC, S	-99	-	-	51814	-
750	Carenata, Diamante	-99	-	-	51814	-
750	Formula	-	-	-	CB4L-B	-
750	Ghost Strike, Formula	-99	-	-	51814	-
750	SF/SFC/GTL/GTS	-	-	-	-	12N24-3A
750	Strike	-	-	-	-	12N24-3A
1000	1000RGS	-	-	-	53030	-
1200	1200	-	-	-	53030	-

Объем	Модель	Год	High Performance AGM / Premium AGM	Maintenance Free	Heavy Duty	Conventional
LEM						
50	Flash	-	-	-	CB4L-B	-
50	Ghibli	-	-	-	CB4L-B	-
LONCIN						
110	LX110-30 II	-	-	-	CB5L-B	-
150	LX150-2EV	-	-	-	CB7L-B	-
200	LX200-2 II	-	-	-	-	12N7A-3A
Luoyang Northern EK Chor						
110	DAYANG 110	-	-	-	CB5L-B	-
125	DAYANG 125	-	-	GTX7A-BS	-	-
MAICO						
125	GS125, 250TM, 360T	-	-	-	-	B39-6
250	CUP	-	-	-	CB5L-B	-
250	MD250	-	-	-	CB5L-B	-
250	TM250, M250	-	-	-	-	B39-6
360	T360	-	-	-	-	B39-6
400	T400	-	-	-	-	B39-6
440	T440	-	-	-	-	B39-6
504	GS504	-	-	-	-	B39-6
MALAGUTTI						
50	Centro	94-	-	-	CB4L-B	-
50	Centro SL/SL Kat	-	-	-	CB5L-B	-
50	Ciak	99	-	-	CB5L-B	-
50	Colors	-	-	-	CB4L-B	-
50	CR1	96-	-	-	CB4L-B	-
50	Crosser EL	98	-	-	CB4L-B	-
50	Dune ES	89	-	-	CB4L-B	-
50	Evolution	-	-	-	CB4L-B	-
50	F10, F12/F12LC Twin Disk	-	-	-	CB4L-B	-
50	F15 Twin Disk/Digit	-	-	-	CB5L-B	-
50	F15/F15 Twin Disk	-	-	-	CB4L-B	-
50	Fifty Top	91	-	-	CB4L-B	-
50	Mistral	-	-	-	CB4L-B	-
50	New Dribbling	-	-	-	CB4L-B	-
50	Phantom F.12	94-	-	-	CB4L-B	-
50	RST	-	-	-	CB4L-B	-
50	Top	-	-	-	CB4L-B	-
50	Yesterday, Euro	99	-	-	CB4L-B	-
100	Ciak	99	-	-	CB5L-B	-
100	F12	-	-	GTX5L-BS	-	-
100	Phantom F.12	99	-	GTX5L-BS	-	-
125	F18	-	-	-	CB9-B	-
125	Madison	00	-	-	CB9-B	-
125	Runner VS, Rally	87-	-	-	CB3L-A	-
125	Runner, R	-86	-	-	-	6N6-3B
150	Ciak	-	-	-	CB9-B	-
150	F18	-	-	-	CB9-B	-
150	Madison	-	-	-	CB9-B	-
180	Madison	-	-	-	CB9-B	-
250	Madison	00	-	-	CB9-B	-
250	Phantom Max	04	-	GTX12-BS	-	-
400	Madison K	02-04	-	-	CB12AL-A	-
500	Spider Max	04-05	-	-	CB14L-A2	-

Объем	Модель	Год	High Performance AGM / Premium AGM	Maintenance Free	Heavy Duty	Conventional
MALANCA						
125	1252CE	-	-	-	-	6N11A-1B
125	125OB One	-	-	-	-	12N5.5-4B
125	Mark 125	-	-	-	-	12N5.5-4B
150	150GT	-	-	-	-	6N11A-1B
MATCHLESS						
250	250	-	-	-	-	B38-6A
350	350	-	-	-	-	B38-6A
500	500	-	-	-	-	B38-6A
650	(6V)	-	-	-	-	B38-6A
650	(12V)	-	-	-	CB7L-B	-
750	750	-	-	-	CB7L-B	-
MBK						
50	Active	-	-	-	CB4L-B	-
50	Booster	93-96	-	-	CB4L-B	-
50	Booster NG	96-97	-	-	CB4L-B	-
50	Booster Road	95	-	-	CB4L-B	-
50	Booster Rocket	96-97	-	-	CB4L-B	-
50	Booster Spirit	-99	-	-	CB4L-B	-
50	Booster Track	-99	-	-	CB4L-B	-
50	CTS/SS	-	-	-	CB4L-B	-
50	Equalis	-99	-	-	CB4L-B	-
50	Evolis	93-97	-	-	CB4L-B	-
50	Fizz	95-96	-	-	CB4L-B	-
50	Forte	96-97	-	-	CB4L-B	-
50	Nitro	-99	-	-	CB4L-B	-
50	Ovetto	-99	-	-	CB4L-B	-
50	Sorriso	-	-	-	CB4L-B	-
50	Target	-	-	-	CB4L-B	-
50	X-Limit DT50	97	-	-	CB3L-A	-
80	Evolis	-	-	-	CB4L-B	-
100	Booster	95-96	-	GTX5L-BS	-	-
100	Nitro	-	-	GTX4L-BS	-	-
100	Ovetto	-	-	GTX4L-BS	-	-
125	Doodo	-	-	-	CB7L-B	-
125	Flame	95-97	-	GTX7A-BS	-	-
125	Flame R	-98	-	GTX7A-BS	-	-
125	Skyliner 125	-	-	-	CB7L-B2	12N7-3B
125	XC Flame/Flame R	-	-	GTX7A-BS	-	-
150	Skyliner	-	-	-	CB7L-B	-
150	Vertex	-	-	GTX7A-BS	-	-
250	Skyliner 250	00	-	GT7B-BS	-	-
300	Kilibre	04	-	GTX9-BS	-	-
660	XT660R	-	-	GT9B-BS	-	-
MORINI						
125	Corsaro	-	-	-	-	6N11A-1B
125	Country	-	-	-	-	6N11A-1B
150	150SS	-	-	-	-	6N11A-1B
175	Turiso, Spor	-	-	-	-	B49-6
350	Coguaro	-	-	-	CB18L-A	-
350	Dart	-	-	-	CB14L-A2	-
350	Excalibur	-	-	-	CB18L-A	-
350	Kanguro	-	-	-	CB18L-A	-
350	New York	-	-	-	CB18L-A	-
350	Sport bicil.	-	-	-	-	12N9-3B
350	Sport bicil. (Electric-Starter)	-	-	-	CB18L-A	-
500	Enduro	-	-	-	-	6N2-2A

МОЩНАЯ И ВЫСОКОПРОИЗВОДИТЕЛЬНАЯ ЛИНЕЙКА ОТ GS

Объем	Модель	Год	High Performance AGM / Premium AGM	Maintenance Free	Heavy Duty	Conventional
MORINI продолжение						
500	Turbo	-	-	-	CB18L-A	-
501	Camel	-	-	-	CB18L-A	-
501	Coguaro	-	-	-	CB18L-A	-
501	Excalibur	-	-	-	CB18L-A	-
501	New York	-	-	-	CB18L-A	-
1200	9 1/2	-	-	GTX20CH-BS	-	-
1200	Sport	-	-	GTX20CH-BS	-	-
1200	Scrambler	-	-	GTX20CH-BS	-	-
1200	Granpasso	-	-	GTX20CH-BS	-	-
1200	Corsaro	-	-	GTX20CH-BS	-	-
1200	Corsaro Veloce	-	-	GTX20CH-BS	-	-
1200	Corsaro Avio	-	-	GTX20CH-BS	-	-
MOTO GUZZI						
125	Bicilindrico	-	-	-	-	6N11A-3A
125	Bizylinder	-	-	-	-	6N11A-3A
125	Custom	-	-	-	-	12N9-4B-1
125	Stornello Scrambler	-	-	-	-	B38-6A
125	Stornello Sport	-	-	-	-	B39-6
125	TT	-	-	-	-	12N5.5-4A
160	Stornello Scrambler	-	-	-	-	B38-6A
175	Lodola	-	-	-	-	B49-6
200	Galletto	-	-	-	-	12N24-3A
200	Motocarro Ercolino	-	-	-	-	B38-6A
250	4 cyilinder	-	-	-	CB12A-A	-
250	Bicilindrico	-	-	-	-	6N11A-3A
250	Bizylinder	-	-	-	-	6N11A-3A
350	Florida	-	-	-	CB18L-A	-
350	GTS (4 cylinder)	-	-	-	52515	-
350	Nevada/Nevda club	-	-	-	CB18L-A	-
350	NTX	-	-	-	CB18L-A	-
350	V35	-	-	-	53030	-
350	V35 Custom	82-86	-	-	CB18L-A	-
350	V35 II	81-86	-	-	53030	-
350	V35 Imola/V35 Monza	-	-	-	53030	-
350	V35/V35 GT/V35 C	-	-	-	53030	-
400	GTS (4 cylinder)	-	-	-	52515	-
500	Falcone	-	-	-	-	B38-6A
500	Falcone u.t.	-	-	-	CB18L-A	-
500	V50	-	-	-	53030	-
500	V50 Custom	81-86	-	-	CB18L-A	-
500	V50 III	81-86	-	-	53030	-
500	V50 Imola/V50 Monza	-	-	-	53030	-
500	V50/V50C	-	-	-	53030	-
650	Nevada	91-93	-	-	C50-N18L-A	-
650	Nevada N.T	94-98	-	-	53030	-
650	NTX	-	-	-	CB18L-A	-
650	V65	-	-	-	53030	-
650	V65 Custom	82-86	-	-	CB18L-A	-
650	V65 Florida	-	-	-	CB18L-A	-
650	V65 Florida	86-93	-	-	53030	-
650	V65 GT	87-94	-	-	53030	-
650	V65 Lario	84-87	-	-	53030	-
650	V65 Sport	82-87	-	-	53030	-
750	Breva	05-	-	GTX14AL-BS	CB14L-A2	-
750	Nevada	05-08	-	-	CB14L-A2	-
750	Nevada	08	-	GTX14AL-BS	-	-
750	Nevada, Club	00-02	-	-	CB18L-A	-
750	Nevada, Club	08	-	GTX14AL-BS	-	-
750	Nevada 750 Classic	-	-	GTX14AL-BS	CB14L-A2	-

Объем	Модель	Год	High Performance AGM / Premium AGM	Maintenance Free	Heavy Duty	Conventional
MOTO GUZZI продолжение						
750	Nevada 750 S.E. 07	-	-	GTX14AL-BS	CB14L-A2	-
750	V7 Classic	-	-	GTX14AL-BS	CB14L-A2	-
750	NTX	88-92	-	-	CB18L-A	-
750	Strada	-	-	-	CB18L-A	-
750	Strada	93-96	-	-	53030	-
750	Targa	90-93	-	-	53030	-
750	V7	-	-	-	53030	-
750	V7	-	-	-	CB14L-A2	-
750	V7	08	-	GTX14AL-BS	-	-
750	V75	95-97	-	-	CB18L-A	-
750	V75	08	-	GTX14AL-BS	-	-
750	V7 Racer 2012	12-	-	GTX14-BS	-	-
750	V7 Stone	13-	-	GTX14-BS	-	-
750	V7 Special	13-	-	GTX14-BS	-	-
850	Breva	-	GTX20CH-BS	-	-	-
850	Griso	-	GTX20CH-BS	-	-	-
850	Le Man	-	-	-	53030	-
850	Norge	-	GTX20CH-BS	-	-	-
850	T3, T4, T5	-	-	-	53030	-
850	T3, T4, T5 III	81-88	-	-	53030	-
936	Bellagio	-	-	GTX20L-BS	-	-
938	Bellagio	13-	-	GTX20CH-BS	-	-
1000	1000NT	-	-	-	53030	-
1000	1000S	94-98	-	-	53030	-
1000	California II/III	82-98	-	-	53030	-
1000	Convert	-	-	-	53030	-
1000	Daytona, RS	92-98	-	-	53030	-
1000	G5/Convert	-	-	-	53030	-
1000	GT	-	-	-	53030	-
1000	Le Mans	-	-	-	53030	-
1000	Le Mans III	85-93	-	-	53030	-
1000	Mille	-	-	-	53030	-
1000	Mille GT	87-93	-	-	53030	-
1000	Quota	-	-	-	53030	-
1000	Quota	92-95	-	-	C50-N18L-A	-
1000	SP/California/III	-	-	-	53030	-
1000	SP/II/III	77-91	-	-	53030	-
1000	Strada	93-96	-	-	53030	-
1000	V10 Centauro Sport/GT/SP	97-00	-	-	53030	-
1064	California Classic	-	-	GTX20L-BS	-	-
1064	California Vintage	-	-	GTX20L-BS	-	-
1100	1100 Sport/1	94-01	-	-	53030	-
1100	Breva	-	-	GTX20L-BS	-	-
1100	Breva	-	GTX20CH-BS	-	-	-
1100	Breva ABS	-07	GTX20CH-BS	-	-	-
1100	Breva, Griso	05-06	GTX20CH-BS	-	-	-
1100	California	-	-	GTX20L-BS	-	-
1100	California EV, Stone	99-04	-	-	53030	-
1100	California, Special, Jackal, Breva, Griso	-	GTX20CH-BS	-	-	-
1100	Griso	-	GTX20CH-BS	-	-	-
1100	Jackal	-	-	-	53030	-
1100	Quota1100ES	00-01	-	-	53030	-
1100	Stone, EV	94-05	-	-	53030	-
1100	V11 Ballabgio	-	-	GTX20L-BS	-	-
1100	V11 Bassa	99-00	-	-	53030	-
1100	V11 EV	98-99	-	-	53030	-
1100	V11 Sport	99-	-	-	53030	-
1200	Griso 1200 8V	13-	GTX20CH-BS	-	--	
1200	Norge 1200 T	-	GTX20CH-BS	-	-	-
1200	Norge GT8V	13-	-	GTX20-BS	-	-

Объем	Модель	Год	High Performance AGM / Premium AGM	Maintenance Free	Heavy Duty	Conventional
MOTO GUZZI продолжение						
1200	Sport	-	GTX20CH-BS	-	-	-
1200	Sport ABS	-	GTX20CH-BS	-	-	-
1200	Stelvio 4V	-	GTX20CH-BS	-	-	-
1200	Stelvio NTX 1200 8V	13-	GTX20CH-BS	-	-	-
1200	Breva 1200	-	GTX20CH-BS	-	-	-
1200	Breva 1200 ABS	-	GTX20CH-BS	-	-	-
1256	MGS-01 Corsa	-	-	GTX20L-BS	-	-
	New California	-	-	GTX20-BS	-	-
MOTOTRANS						
-	250 Strada	-	-	-	-	12N12A-4A-1
-	350 Forsa	-	-	-	C50-N18L-A	-
-	350 Vento	-	-	-	-	12N12A-4A-1
-	500 Desmo	-	-	-	CB14L-A2	-
-	500 Twin	-	-	-	C50-N18L-A	-
MOTRON						
50	Compact Racing RZ1	-	-	-	CB4L-B	-
50	Invader	-	-	-	CB4L-B	-
50	Spike	-	-	-	CB4L-B	-
50	Sting	-	-	-	CB4L-B	-
50	Syncro	-	-	-	CB4L-B	-
50	Thunder	-	-	-	CB4L-B	-
50	XLE	-	-	-	CB4L-B	-
MuZ						
125	All Models	All	-	-	CB9L-A2	-
660	Skorpion	95-01	-	-	CB9L-A2	-
MV AGUSTA						
750	F4, Brutale	00-08	YTZ10S	-	-	-
750	F4, Brutale	04-	YTZ10S	-	-	-
750	F4, Serie Oro	-	-	-	53030	-
910	Brutale	06-08	YTZ10S	-	-	-
1000	F4	05-08	YTZ10S	-	-	-
1000	F4 1000	-	-	-	C60-N24L-A	-
MZ						
125	125ES, ETS	-	-	-	-	6N11A-1B
125	125ETZ	-	-	-	-	12N9-3B
125	125TS	-	-	-	-	6N11A-1B
125	150ETZ	-	-	-	-	12N9-3B
125	Roadstar	93-94	-	-	CB5L-B	-
125	Sazson Sport Star	93-97	-	-	CB5L-B	-
150	TS150	-	-	-	-	6N11A-1B
250	ETS250	-	-	-	-	6N11A-1B
250	ETZ250	-	-	-	-	12N9-3B
250	TS250	-	-	-	-	6N11A-1B
251/301	Saxson Fun, Tour	93-94	-	-	CB5L-B	-
500	Green Star	97	-	-	CB14L-A2	-
500	Red Star	97	-	-	CB14L-A2	-
500	Saxon Fun	93	-	-	CB14L-A2	-
500	Saxson Country	93-97	-	-	CB14L-A2	-
500	Silver Star Classic	93-96	-	-	CB14L-A2	-
500	Tour	93-94	-	-	CB14L-A2	-
660	Skorpion Classic	97	-	-	CB9L-B	-
660	Skorpion Race Replica	95-96	-	-	CB9L-B	-
660	Skorpion Replica	97	-	-	CB9L-B	-
660	Skorpion Sport	94-97	-	-	CB9L-B	-

Объем	Модель	Год	High Performance AGM / Premium AGM	Maintenance Free	Heavy Duty	Conventional
MZ продолжение						
660	Skorpion Tour	94-97	-	-	CB9L-B	-
660	Skorpion Traveller	97	-	-	CB9L-B	-
NANJING JINCHENG						
-	SJ110	-	-	-	CB5L-B	-
NORTON						
350	350 Navigator	-	-	-	-	6N11A-1B
750	750 Ranger Commando	-	-	-	CB9-B	-
850	850 Commando, Commando (75)	-	-	GTX14AL-BS	-	-
OZBIKE						
All Models	All	-		GTX5L-BS	-	-
PANDA MOTOR SPORTS						
50	Com-ute	96-02	-	-	-	6N4-2A
50	Cub	96-99	-	GTX4L-BS	-	-
50	Fun Rider	96-02	-	-	-	6N2-2A
50	Retro	01-02	-	-	CB7-A	-
70	Trail Rider	99-02	-	GTX4L-BS	-	-
PEUGEOT						
25	Fox LA	95-97	-	-	CB4L-B	-
50	Buxy	95-97	-	-	CB4L-B	-
50	Buxy RS	96-97	-	-	CB4L-B	-
50	Elyseo	98	-	-	CB4L-B	-
50	Elystar TDS	03-	-	-	CB4L-B	-
50	Fox Lux	95-97	-	-	CB4L-B	-
50	Liverty	-	-	-	CB4L-B	-
50	Looxor	01-	-	-	CB4L-B	-
50	Looxor TDS	02-	-	-	CB7L-B	-
50	Rapido/Rapido3	01-	-	-	CB4L-B	-
50	SCLI Metropolis	01-	-	-	CB4L-B	-
50	Speedake	01-	-	-	CB4L-B	-
50	Speedfight/LC	97-99	-	-	CB4L-B	-
50	Speedfight 2	00-	-	-	CB4L-B	-
50	Squab	96-97	-	-	CB4L-B	-
50	ST	01-	-	-	CB4L-B	-
50	SV Blue Star	97	-	-	CB4L-B	-
50	SV Junior	93-96	-	-	CB4L-B	-
50	SV/SV Geo	93-97	-	-	CB4L-B	-
50	Trekker Road/Off Road	99	-	-	CB4L-B	-
50	Vivacity	99	-	-	CB4L-B	-
50	X-Fight	-	-	-	CB4L-B	-
50	Zenith	95-96	-	-	CB4L-B	-
50	Jet Force	03	-	-	CB4L-B	-
50	Ludix	04	-	-	CB4L-B	-
80	SV80	93-96	-	-	CB5L-B	-
100	Elyseo	99	-	-	CB7L-B	-
100	Elyseo	01-	-	GTX5L-BS	-	-
100	Looxor	01-	-	GTX5L-BS	-	-
100	Speedfighter	98-	-	GTX5L-BS	-	-
100	SV	-97	-	-	CB5L-B	-
100	Trekker	98-	-	GTX5L-BS	-	-
100	Vivacity	99-	-	GTX5L-BS	-	-
100	X-Fight	01-	-	GTX5L-BS	-	-
100	Zenith	01-	-	-	CB4L-B	-
105	Ciclomotore (Electric-Starter)	01-	-	-	CB4L-B	-
125	Jet Force	03	-	-	CB12AL-A	-

Объем	Модель	Год	High Performance AGM / Premium AGM	Maintenance Free	Heavy Duty	Conventional
PEUGEOT продолжение						
125	Jet Force Compressor	03	-	-	CB12AL-A	-
125	Satelis	05	-	-	CB12AL-A	-
125	Satelis Compressor	07	-	-	CB14L-A2	-
125	Geopolis	05	-	-	CB12AL-A	-
125	Elyseo	-	-	-	CB7-A	-
125	Elystar	02-	-	-	CB7-A	-
125	SV125	93-97	-	-	CB5L-B	-
125	CityStar	11	-	-	CB12AL-A	-
150	Elyseo	98	-	-	CB7-A	-
150	Elystar	02-	-	-	CB7-A	-
250	ST/SV	01-	-	GTX12-BS	-	-
250	Satelis	06	-	-	CB12AL-A	-
250	Geopolis	05	-	-	CB12AL-A	-
400	Satelis	07	-	GTX12-BS	-	-
500	Satelis	07	-	GTX12-BS	-	-
PGO						
25	Comet	95-97	GTX4L-BS	GT4L-BS	-	-
25	Galaxy	97	GTX4L-BS	GT4L-BS	-	-
25	Mega	97	GTX4L-BS	GT4L-BS	-	-
50	Big Max	95-96	-	-	CB4L-B	-
50	Big Max Sport	96-97	GTX4L-BS	GT4L-BS	-	-
50	Comet	93-96	GTX4L-BS	GT4L-BS	-	-
50	Comet Junior	94-97	GTX4L-BS	GT4L-BS	-	-
50	Galaxy	93-97	GTX4L-BS	GT4L-BS	-	-
50	Mega	97	GTX4L-BS	GT4L-BS	-	-
50	Star-Star II	93-96	-	-	CB4L-B	-
50	Tornado	97	GTX4L-BS	GT4L-BS	-	-
80	Star	93-96	GTX4L-BS	GT4L-BS	-	-
90	Big Max	97	GTX4L-BS	GT4L-BS	-	-
90	Galaxy	94-97	GTX4L-BS	GT4L-BS	-	-
90	Tornado	97	GTX4L-BS	GT4L-BS	-	-
PIAGGIO						
25	Free, FL	94-98	-	-	CB4L-B	-
25	Velofax	-98	-	-	CB4L-B	-
25	Zip	94-98	-	-	CB4L-B	-
50	D-M.B.NRG 2T H20 POW.	-	-	-	CB9-B	-
50	Diesis	-	-	-	CB4L-B	-
50	DNA	-	-	GTX4L-BS	-	-
50	Easy Moving	-	-	-	CB4L-B	-
50	Fly	09-12	-	-	CB4L-B	-
50	Fly 2T	13-	-	-	CB4L-B	-
50	Fly 4T	-	-	-	CB9-B	-
50	Free 50 Poste	-	-	GTX4L-BS	-	-
50	Free PTT	-	-	GTX4L-BS	-	-
50	Free, FD	94-99	-	-	CB4L-B	-
50	Free	-	-	GTX4L-BS	-	-
50	GPR 50	-	-	GTX4L-BS	-	-
50	ICE 50	-	-	GTX4L-BS	-	-
50	Liberty	-99	-	-	CB4L-B	-
50	Liberty 2T, 2T RST	-	-	GTX4L-BS	CB4L-B	-
50	Liberty 2T Sport	-	-	-	CB4L-B	-
50	Liberty 4T, 4T RST	-	-	-	CB9-B	-
50	Liberty 50 2 Tempi	-	-	GTX4L-BS	-	-
50	Liberty 504T PTT Belgio	-	-	-	CB9-B	-
50	Liberty 504T PTT(D)	-	-	-	CB9-B	-
50	Liberty 50 4T PTT Portogallo	-	-	-	CB9-B	-
50	Liberty 504T PTT Slovenia	-	-	-	CB9-B	-
50	Liberty 504T RST PTT Fran	-	-	-	CB9-B	-

Объем	Модель	Год	High Performance AGM / Premium AGM	Maintenance Free	Heavy Duty	Conventional
PIAGGIO продолжение						
50	Liberty 504T PTT RST Ital	-	-	-	CB9-B	-
50	Liberty 504T RST Europa	-	-	-	CB9-B	-
50	Liberty PTT	-	-	GTX4L-BS	-	-
50	LX50	10-12	-	-	CB9-B	-
50	New Fly 50 4T	13-	-	GTX7L-BS	-	-
50	NRG	94-98	-	-	CB4L-B	-
50	NRG	-	-	GTX4L-BS	-	-
50	NRG 2T H20 Power	-	-	-	CB9-B	-
50	NRG Extreme, DT, DD	-99	-	GTX4L-BS	-	-
50	NRG MC2	96-98	-	-	CB4L-B	-
50	NRG MC3	01-	-	GTX4L-BS	CB4L-B	-
50	NRG Power	-	-	-	CB4L-B	-
50	NRG Power DD	-	-	-	CB4L-B	-
50	NRG Power DT	-	-	-	CB4L-B	-
50	NRG Power D/T	-	-	-	CB9-B	-
50	NRG Power PureJet	-	-	-	CB9-B	-
50	NRG PureJet	03-	-	-	CB9-B	-
50	NTT	-	-	-	CB4L-B	-
50	Quartz	93-98	-	-	CB4L-B	-
50	RCR	-	-	-	CB4L-B	-
50	Runner 50 IN. Replica UK	-	-	-	CB9-B	-
50	Runner Iniez, PureJet	-	-	-	CB9-B	-
50	Runner Iniez. Europ	-	-	-	CB9-B	-
50	Runner Iniez. UK	-	-	-	CB9-B	-
50	Runner Poggiali	-	-	GTX4L-BS	-	-
50	Runner Replica	-	-	-	CB9-B	-
50	Runner SP, DD, FL	-	-	-	CB4L-B	-
50	Runner SP Race	-	-	-	CB4L-B	-
50	Runner SP SC	-	-	-	CB4L-B	-
50	Scatto	-	-	-	CB4L-B	-
50	Sfera, RST	93-98	-	-	CB4L-B	-
50	SMT	-	-	-	CB4L-B	-
50	SP 50	10-12	-	-	CB4L-B	-
50	SR 50 PureJet	-	-	-	CB9-B	-
50	Stalker 50	-	-	GTX4L-BS	CB4L-B	-
50	Stalker Naked	-	-	-	CB4L-B	-
50	Storm 50	95-96	-	GTX4L-BS	CB4L-B	-
50	Typhoon 50	94-99	-	GTX4L-BS	CB4L-B	-
50	Typhoon 50 2T	13-	-	-	CB9-B	-
50	Typhoon 50 USA	-	-	-	CB9-B	-
50	Typhoon 50 Canada	-	-	-	CB9-B	-
50	Velofax	-98	-	-	CB4L-B	-
50	Vespa 4T	-	-	GTX4L-BS	CB9-B	-
50	Vespa Elestar	-	-	-	-	6N11A-3A
50	Vespa ET2 Iniez	-	-	GTX5L-BS	CB5L-B	-
50	Vespa ET2, Injection	98-	-	GTX4L-BS	CB4L-B	-
50	Vespa ET4	-	-	-	CB9-B	-
50	Vespa ET4 Euro 2	-	-	-	CB9-B	-
50	Vespa LX 2T	-	-	GTX4L-BS	CB4L-B	-
50	Vespa LX 4T, LXV 2T	-	-	-	CB9-B	-
50	M.B. Vespa 25 KM/H LX (B-NL-D-DK)	08	-	-	CB9-B	-
50	M.B. Vespa 25 KM/H LX (B-NL) Vers. Spec	08	-	-	CB9-B	-
50	M.B. Vespa 50/2T LX Germania	08	-	-	CB9-B	-
50	M.B. Vespa 50/2T LX Europa	08	-	-	CB9-B	-
50	M.B. Vespa 50 LXS Budget	07	-	-	CB9-B	-
50	M.B. Vespa 50 LX E.3 Svizzera	08	-	-	CB9-B	-
50	M.B. Vespa 50/2T LX 30 Km/h DK	08	-	-	CB9-B	-
50	Vespa PK FL/FL2	-	-	-	CB7-A	-
50	Vespa PK Marce A.EL	-	-	GTX5L-BS	CB5L-B	-
50	Vespa PK N, S	-	-	-	CB7-A	-

Объем	Модель	Год	High Performance AGM / Premium AGM	Maintenance Free	Heavy Duty	Conventional
PIAGGIO продолжение						
50	Vespa PK Rush	-	-	-	CB7-A	-
50	Vespa PK/HP	-	-	-	CB7-A	-
50	Vespa S 50 2T	13-	-	-	CB4L-B	-
50	Vespa S 50 4T	13-	-	-	CB9-B	-
50	Vespa PX	-	-	-	CB9-B	-
50	Zip 4T	02-	-	GTX9-BS	-	-
50	Zip 4 Tempi Euro 2	-	-	GTX7L-BS	-	-
50	Zip Catalyzed. 2T	02-	-	GTX4L-BS	-	-
50	Zip FR, RST, SP 2T H2O	-	-	-	CB4L-B	-
50	Zip SP (Euro 2)	06-08	-	-	CB4L-B	-
50	Zip	-	-	GTX4L-BS	CB4L-B	-
50	Zip, Fast Rider	-	-	-	CB4L-B	-
80	P80X	-	-	-	-	12N5.5-3B
80	PK80	-	-	-	-	12N5.5-3B
80	PK80 S, XL	-	-	-	CB7-A	-
80	PX80 E	-	-	-	CB9-B	CB7-A
80	PX80 E Lusso	90-96	-	-	CB7-A	-
80	Sfera	93-95	-	-	CB7-A	-
100	Diesis	07-	-	GTX4L-BS	-	-
100	Free 100 4T	-	-	GTX7L-BS	-	-
125	Beverly	00-	-	GT12B-BS	-	-
125	Beverly, Sport (Euro 3)	-	-	GTX12-BS	-	-
125	Beverly 125 GT, 4T	-	-	-	CB9-B	-
125	Beverly 125 EUR	-	-	-	CB9-B	-
125	Beverly 125 UK	-	-	-	CB9-B	-
125	Carnaby 124 4T	-	-	GTX12-BS	-	-
125	Cosa, CL, FL, X	-95	-	-	CB7-A	-
125	DNA 125	-	-	-	CB9-B	-
125	DNA 125 4T	-	-	-	CB10L-B	-
125	Excutive	00-	-	-	CB9-B	-
125	Fly	-	-	-	CB9-B	-
125	Granturismo	-	-	GTX12-BS	-	-
125	Hexagon	-	-	-	CB9-B	-
125	Hexagon 4T	-	-	-	CB10L-BP	-
125	Hexagon GTX	-	-	-	CB10L-B	-
125	Hexagon LX4	00-	-	GTX12-BS	-	-
125	Hexagon, Hexagon LX, RST	-99	-	-	CB9-B	-
125	IMP. ELETTR. V. 125 ET4	-	-	-	CB9-B	-
125	Liberty	99	-	-	CB9-B	-
125	Liberty 125 3V	13-	-	GTX7L-BS	-	-
125	Liberty 4T, Sport	08	-	GTX12-BS	-	-
125	MP3	07-	-	GTX14-BS	-	-
125	New Fly 125 3V	13-	-	GT12B-BS	-	-
125	Nexus 125	-	-	GTX12-BS	-	-
125	RS 125 ES, Racing	-	-	-	CB9-B	-
125	Runner 125	10-12	-	-	CB9-B	-
125	Runner 125 VX 4T	07	-	GTX12-BS	CB9-B	-
125	Runner, DT, DD, 4T, VX	-	-	-	CB9-B	-
125	RUNNER 125 E2	-	-	-	CB9-B	-
125	M. Base Liberty 125 RST	-	-	-	CB9-B	-
125	Vespa PX 125 E2 Belgio 05-	-	-	-	CB9-B	-
125	Vespa PX 125 E2	-	-	-	CB9-B	-
125	Sfera RST	-	-	GTX9-BS	CB9-B	-
125	Sfera 4T	96-98	-	GTX7L-BS	CB7-A	-
125	Skipper	-	-	-	CB7-A	-
125	Skipper 125 2T	-	-	-	CB9-B	-
125	Skipper 4T	-	-	-	CB9-B	-
125	Skipper LX/ST4T	99	-	-	CB9-B	-
125	SKR	94-98	-	-	CB7-A	-
125	ST4 Leader	00-	-	GTX9-BS	-	-

Объем	Модель	Год	High Performance AGM / Premium AGM	Maintenance Free	Heavy Duty	Conventional
PIAGGIO продолжение						
125	Superhexagon GTX	00-	-	GTX12-BS	-	-
125	New Fly 125 3V	13-	-	GT12B-BS	-	-
125	Typhoon, X, XR	96-99	-	-	CB9-B	-
125	V. 125 ET4 Euro2	-	-	-	CB9-B	-
125	V.125 ET4 Euro2 Europa	-	-	-	CB9-B	-
125	Vespa ET4, LX	96-00	-	-	CB9-B	-
125	Vespa ETS	-	-	-	CB7-A	-
125	Vespa Granturismo	-	-	-	CB9-B	-
125	Vespa GT H2O, UK	-	-	-	CB9-B	-
125	New Fly 125 3V	13-	-	GT12B-BS	-	-
125	Vespa GTV 4T Navy, LXV	-	-	GTX12-BS	-	-
125	Vespa LX 125 3V	13-	-	GTX7L-BS	-	-
125	Vespa LXV 125 4T	-	-	GTX12-BS	-	-
125	Vespa P125X	-98	-	-	-	12N5.5-3B
125	Vespa PK-S, -FL, - XL	-	-	-	CB7-A	-
125	Vespa PX	13-	-	-	CB9-B	-
125	Vespa PX E	-98	-	-	CB9-B	-
125	Vespa PX S	-98	-	-	CB7-A	-
125	Vespa S 125 3V	13-	-	GTX7L-BS	-	-
125	Vespa Sprint	-	-	-	-	B39-6
125	Vespa T5	-	-	-	CB7-A	-
125	X7 (Euro 3)	08	-	GTX12-BS	-	-
125	X8 Premium	-	-	GTX14-BS	-	-
125	X8 Street, Premium (Euro 2)	-	-	-	CB10L-BP	-
125	X9, Evolution	00-	-	-	CB10L-B	CB9-B
125	Zip 4T	00-	-	GTX9-BS	-	-
125	X8 125 Premium (Euro 3)	-	-	GTX14-BS	-	-
125	Beverly 125 Tourer (Euro 3)	-	-	GTX12-BS	-	-
125	Vespa GTV 125 4T Navy (Euro 3)	-	-	GTX12-BS	-	-
125	Vespa LXV 125 4T Navy (Euro 3)	-	-	GTX12-BS	-	-
125	Runner 125 VX 4T -ST- (Euro 3)	-	-	GTX12-BS	-	-
125	X Evo 125 (Euro 3)	-	-	GTX14-BS	-	-
125	X10 125	12-	-	GTX12-BS	-	-
150	Cosa CL, X	-	-	-	CB7-A	-
150	Excutive	-	-	-	CB9-B	-
150	Fly 150	09-12	-	-	CB9-B	-
150	Hexagon	95-97	-	-	CB9-B	-
150	Liberty	00-	-	-	CB9-B	-
150	Liberty 150 3V	13-	-	GTX7L-BS	-	-
150	Liberty 4T, Sport	-	-	GTX12-BS	-	-
150	LX150	10	-	-	CB9-B	-
150	Skipper	-	-	-	CB7-A	-
150	Skipper 150 2T	-	-	-	CB9-B	-
150	Skipper LX/ST 4T	-99	-	GTX9-BS	CB9-B	-
150	Typhoon 150	-	-	-	CB9-B	-
150	Vespa ET4 (sealed)	99-	-	GTX9-BS	-	-
150	Vespa ET4, LX, PX	-	-	-	CB9-B	-
150	Vespa GL	-	-	-	-	B39-6
150	Vespa GS	-	-	-	-	B49-6
150	Vespa LX 4T	-	-	GTX12-BS	-	-
150	Vespa PX X	-	-	-	CB7-A	-
150	Vespa Sprint	-	-	-	-	B49-6
150	Skipper 150cc	-	-	-	CB9-B	-
150	Fly 150	-	-	-	CB9-B	-
150	Fly 150 4T USA	-	-	-	CB9-B	-
150	Vespa 150 LX 3V	13-	-	GTX7L-BS		-
150	Vespa 151 ET4 Euro2 Europa	-	-	-	CB9-B	-
150	Vespa 150 LX Canada 2007	-	-	-	CB9-B	-
150	Vespa 150 LX USA 2007	-	-	-	CB9-B	-
150	Liberty 150cc.	-	-	GT12A-BS	-	-
150	Liberty Sport 150cc.	-	-	GT12A-BS	-	-

МОЩНАЯ И ВЫСОКОПРОИЗВОДИТЕЛЬНАЯ ЛИНЕЙКА ОТ GS

Объем	Модель	Год	High Performance AGM / Premium AGM	Maintenance Free	Heavy Duty	Conventional
PIAGGIO продолжение						
150	Liberty 150 4T (Euro 3)	-	-	GTX12-BS	-	-
150	Liberty 150 4T Sport (Euro 3)	-	-	GTX12-BS	-	-
150	Vespa PX 151 E2	-	-	-	CB9-B	-
150	Vespa PX 150 USA	-	-	-	CB9-B	-
150	Vespa PX 150	-	-	-	CB9-B	-
150	X8 Street (Euro 2)	-	-	-	CB10L-BP	-
180	DNA 180	-	-	-	CB9-B	-
180	DNA 180 4T	-	-	-	CB10L-BP	-
180	Hexagon 4T	-	-	-	CB10L-BP	-
180	Hexagon LXT	-99	-	-	CB10L-B	-
180	Hexagon LXT	00-	-	GTX12-BS	-	-
180	Runner 180 2T	-	-	-	CB9-B	-
180	Runner 180 4T	07-	-	GTX12-BS	-	-
180	Superhexagon GTX	01-	-	GTX12-BS	-	-
180	Vespa SS	01-	-	-	-	B49-6
180	X9	01-	-	-	CB10L-BP	-
200	Beverly	-	-	GT12B-BS	CB10L-BP	-
200	Beverly 200	07-	-	GTX12-BS	-	-
200	Carnaby 4T	-	-	GTX14-BS	-	-
200	Cosa	-96	-	-	CB9-B	-
200	Granturismo L	-	-	-	CB10L-BP	-
200	Liberty	-	-	GTX12-BS	CB10L-BP	-
200	Liberty 200 4T	-	-	GTX12-BS	CB10L-BP	-
200	Liberty 200 4T Sport	07	-	GTX12-BS	-	-
200	Runner 4T	-	-	-	CB10L-BP	-
200	Runner VXR 4T, RST	-	-	GTX12-BS	CB10L-BP	-
200	Vespa Granturismo	-	-	-	CB10L-BP	-
200	Vespa GT200	-	-	-	CB10L-BP	-
200	Vespa P E	-	-	-	CB7-A	-
200	Vespa PX E Lusso	-98	-	-	CB9-B	CB7-A
200	X8	-	-	-	CB10L-BP	-
200	X9 Evolution	-	--	-	CB10L-BP	-
200	Motore Go-Kart 200cc	-	-	GTX7L-BS	-	-
200	Vespa PX 200	-	-	-	CB9-B	-
200	Liberty 200cc.	-	-	GT12A-BS	-	-
200	Carnaby 200 4T (Euro 3) (2007-08)	-	-	GTX14-BS	-	-
200	Runner 200 VXR 4T -ST- (Euro 3)	10-12	-	GTX12-BS	-	-
250	Beverly, Cruiser, Tourer	-	-	GTX14-BS	-	-
250	Beverly, RST, Euro 3	-	-	-	CB10L-BP	-
250	Carnaby 4T ie	-	-	GTX14-BS	-	-
250	GTS250	10	GTX14H-BS	GTX14-BS	-	-
250	GTV250	10	GTX14H-BS	GTX14-BS	-	-
250	Hexagon	99	-	-	CB10L-BP	-
250	Hexagon	98	-	-	CB9-B	-
250	Hexagon GT	00-	-	GTX12-BS	-	-
250	MP3	07-12	-	GTX14-BS	-	-
250	Nexus, Euro 3	-	-	GTX14-BS	-	-
250	Nexus, SP Euro 3	-	-	GTX14-BS	CB14L-A2	-
250	Superhexagon GTX	00	-	-	CB10L-B	-
250	Superhexagon GTX	01-03	-	GTX12-BS	-	-
250	Superhexagon GTX	03-	-	-	CB10L-BP	-
250	Vespa GTS, GTV, ie 60	-	-	-	CB10L-BP	-
250	Vespa GTV ie Navy	-	-	GTX14-BS	-	-
250	X Evo	-	-	GTX14-BS	-	-
250	X7 ie	08	-	GTX14-BS	-	-
250	X8	-	-	-	CB10L-BP	-
250	X8 ie	-	-	GTX14-BS	-	-
250	X9 Evolution	01-	-	GTX12-BS	CB10L-B	-
250	MP3 250	-	-	GTX14-BS	-	-
250	X9 250cc.	-	-	-	CB14L-A2	-

Объем	Модель	Год	High Performance AGM / Premium AGM	Maintenance Free	Heavy Duty	Conventional
PIAGGIO продолжение						
250	Nexus 250cc.	-	-	-	CB14L-A2	-
250	Beverly 250	-	-	GTX14-BS	-	-
250	X8 250 ie	-	-	GTX14-BS	-	-
250	Beverly 250 (Euro 3) (MIC 2007)	-	-	GTX14-BS	-	-
250	Carnaby 250 4T ie (Euro 3)	-	-	GTX14-BS	-	-
250	X Evo 250 (Euro 3)	-	-	GTX14-BS	-	-
250	Nexus 250 (Euro 3) (2007)	-	-	GTX14-BS	-	-
250	X7 250 ie (Euro 3)	-	-	GTX14-BS	-	-
250	Beverly 250 Tourer (Euro 3)	-	-	GTX14-BS	-	-
250	Vespa GTV 250 ie Navy	-	-	GTX14-BS	-	-
250	Beverly 250 Cruiser (Euro 3)	-	-	GTX14-BS	-	-
300	Beverly	13-	-	GTX12-BS	-	-
300	GTS300	10-12	GTX14H-BS	GTX14-BS	-	-
300	MP3	13-	-	GTX14-BS	-	-
300	MP3 Hybrid	13-	-	GTX14-BS	-	-
300	Nexus 300 ie (Euro 3)	-	-	GTX14-BS	-	-
300	Nexus ie	-	-	GTX14-BS	-	-
300	Vespa GTS	13-	-	GTX12-BS	-	-
300	Vespa GTS ie Super	-	-	GTX14-BS	-	-
300	Vespa GTS Super	13-	-	GTX12-BS	-	-
300	X7 Evo	13-	-	GTX12-BS	-	-
300	Yourban	13-	-	GTX14-BS	-	-
330	X10 350	-	-	GTX12-BS	-	-
350	Beverly Sports Touring	13-	-	GTX12-BS	-	-
400	Beverly 400 Euro 3	-	-	-	CB10L-BP	-
400	Beverly ie Tourer	-	-	GTX14-BS	-	-
400	MP3	-	-	GTX14-BS	-	-
400	X Evo	-	-	GTX14-BS	-	-
400	X8 ie, Euro 3	-	-	GTX14-BS	-	-
400	X8, Euro 3	-	-	-	CB10L-BP	-
401	X Evo 400 (Euro 3)	-	-	GTX14-BS	-	-
401	X8 400 ie (Euro 3)	-	-	GTX14-BS	-	-
400	Beverly 400 ie (Euro 3)	-	-	GTX14-BS	-	-
400	Beverly 400 ie Tourer (Euro 3)	-	-	GTX14-BS	-	-
400	MP3 400cc	08-12	GTX14H-BS	GTX14-BS	-	-
493	X10 500	-	-	GTX12-BS	-	-
500	Beverly, Cruiser, Euro 3	-	-	GTX14-BS	-	-
500	Beverly, Euro 3	-	-	-	CB10L-BP	-
500	BV500	08-12	GTX14H-BS	GTX14-BS	-	-
500	MP3	08-12	GTX14H-BS	GTX14-BS	-	-
500	Nexus, Euro 3	-	-	-	CB14L-A2	-
500	X9 Evolution	01-	-	-	CB14L-A2	-
500	X9 Evolution USA	-	-	GTX14-BS	-	-
500	Beverly 500 (Euro 3)	-	-	GTX14-BS	-	-
500	X9 500cc.	-	-	-	CB14L-A2	-
500	Nexus 500cc.	-	-	-	CB14L-A2	-
500	Beverly 500 Cruiser (Euro 3)	-	-	GTX14-BS	-	-
502	Beverly 500 Cruiser (Euro 3)	-	-	GTX14-BS	-	-
500	X9 500cc	-	-	GTX16-BS	-	-
500	Fuoco 500cc	10-12	GTX20CH-BS	GTX16-BS	-	-
-	Vespa 946	13-	-	GTX12-BS	-	-
POLARIS VICTORY						
1507	V92C, DC Classic, Deluxe Cruiser	98-04	GTX20HL-BS	GTX20L-BS	-	-
1507	V92SC Sport Cruiser	00-01	GTX20HL-BS	GTX20L-BS	-	-
1507	V92TC Touring Cruiser	02-06	GTX20HL-BS	GTX20L-BS	-	-
1507	Vegas, Kingpin, 8-ball, Hammer	03-05	GTX20HL-BS	GTX20L-BS	-	-
1634	Vegas, Kingpin, 8-ball, Hammer (-08)	06-10	GTX20HL-BS	-	-	-
1731	Vegas Jackpot, Hammer, Ness, Vision	01-08	GTX20HL-BS	-	-	-

Объем	Модель	Год	High Performance AGM / Premium AGM	Maintenance Free	Heavy Duty	Conventional
PUCH						
-	Cobra 80	-	-	-	-	B39-6
-	Cobra GTL, Daytona N50, Monza	-	-	-	-	B39-6
-	Lido SL50, Lido Vario	-	-	-	CB4L-B	-
-	Monza GP, Monza GX, Monza X	-	-	-	-	B39-6
QIANJIANG						
50	B01	-	GTX4L-BS	GT4L-BS	-	-
50	QJ36-A	-	-	-	CB4L-B	-
50	QJ50T, QJ50T-2	-	-	-	CB4L-B	-
50	QJ50T-2A	-	GTX4L-BS	GT4L-BS	-	-
50	T08/B01	-	-	GT4L-BS	-	-
50	QJ50T-8	-	-	GTX5L-BS	-	-
50	T08	-	GTX4L-BS	GT4L-BS	-	-
100	QJ110-6	-	-	-	CB5L-B	-
100	T12	-	-	GTX7L-BS	-	-
125	QJ125	-	-	GTX7A-BS	-	12N7-4A
125	QJ125J	-	-	-	-	12N9-4B-1
125	QJ125T	-	-	GTX7A-BS	-	-
125	QJ125T-3F	-	-	GTX7A-BS	-	-
150	QJ150T	07-	-	GTX7A-BS	-	-
250	QJ250T	07-	-	GTX9-BS	-	-
RIZZATO						
50	Byte AT10	-	-	-	CB4L-B	-
50	Carosello	-	-	-	CB4L-B	-
50	Hacker AT12, LC/Racing	-	-	-	CB4L-B	-
ROYAL ENFIELD						
350	All Electric Start Models	00-03	-	GTX14AL-BS	-	-
350	All Kick-start Models	95-99	-	-	CB7-A	-
350	All Kick-start Models	00-03	-	-	CB5L-B	-
SYM						
50	Cinderella	89	-	GTX7A-BS	-	-
50	DD	-	-	GTX4L-BS	-	-
50	Fiddle	75-77	-	GTX4L-BS	-	-
50	Fiddle	10-12	-	GTX7A-BS	-	-
50	Jet	79-81	-	GTX4L-BS	-	-
50	JetEuro 50	10-12	YTZ7S	-	-	-
50	Jungle	89	-	GTX4L-BS	-	-
50	Mask	-	-	GTX5L-BS	-	-
50	Mio	10-12	-	GTX7A-BS	-	-
50	Reddevil	75-77	-	GTX4L-BS	-	-
50	Superfancy	79-81	-	GTX4L-BS	-	-
50	Wind 50	-	YTZ7S	TTZ7S	-	-
100	Bonus	-	-	-	CB5L-B	-
100	Cinderella	99-01	-	GTX7A-BS	-	-
100	Woo 100	-	YTZ10S	TTZ10S	-	-
100	Jet	75-77	-	GTX5L-BS	-	-
100	Mio	-	-	GTX5L-BS	-	-
100	Wind 100	-	YTZ7S	TTZ7S	-	-
100	Wo Wow 100	-	-	-	CB5L-B	-
110	Magic	-	-	-	CB5L-B	-
110	Rvi	-	-	-	CB5L-B	-
110	mii 110	-	YTZ10S	TTZ10S	-	-
110	RX 110	-	YTZ10S	TTZ10S	-	-
125	Attila	99-00	-	GTX7A-BS	-	-
125	Husky	89	-	GTX7L-BS	-	-
125	Newduke	00-01	-	GTX7A-BS	-	-

Объем	Модель	Год	High Performance AGM / Premium AGM	Maintenance Free	Heavy Duty	Conventional
SYM продолжение						
125	Shark	-	-	GTX9-BS	-	-
125	Superduke	00-01	-	GTX7A-BS	-	-
125	GR125 EFI	-	YTZ10S	TTZ10S	-	-
125	GT125 EFI, EVO	12-	-	GTX7A-BS	-	-
125	Jet Power 125	-	YTZ10S	TTZ10S	-	-
125	GT 125 EFI	-	YTZ10S	TTZ10S	-	-
125	GT 125 EVO	-	YTZ10S	TTZ10S	-	-
125	Wild Wolf 125	-	YTZ10S	TTZ10S	-	-
125	Wild Wolf Legend 125	-	YTZ10S	TTZ10S	-	-
125	Wild Wolf Legend R 125	-	YTZ10S	TTZ10S	-	-
125	Wolf 125	-	YTZ10S	TTZ10S	-	-
125	Wolf R125	-	YTZ10S	TTZ10S	-	-
125	Z1 125	-	YTZ10S	TTZ10S	-	-
150	Attila	00-01	-	GTX7A-BS	-	-
150	Joyride	-	-	GTX9-BS	-	-
150	Shark	-	-	GTX9-BS	-	-
150	Super Duke	96 -	-	GTX9-BS	-	-
150	VS/EXCEL	-	-	GTX9-BS	-	-
150	GT 150	-	YTZ10S	TTZ10S	-	-
150	New Fighter	-	YTZ10S	TTZ10S	-	-
150	Fighter 150	-	YTZ10S	TTZ10S	-	-
150	Golden Wolf 150	-	YTZ10S	TTZ10S	-	-
150	Wild Wolf Legend R 150	-	YTZ10S	TTZ10S	-	-
150	Wolf 150	-	YTZ10S	TTZ10S	-	-
150	Wolf R150	-	YTZ10S	TTZ10S	-	-
150	T1 150	-	-	GTX9-BS	-	-
180	RV 180	-	-	GTX9-BS	-	-
200	HD	10-12	-	GTX9-BS	-	-
200	Joyride	-	-	GTX9-BS	-	-
250	RV 250	10-12	-	GTX12-BS	-	-
250	GTS	-	-	GTX12-BS	-	-
250	T2 250	-	-	GT12A-BS	-	-
300	GTS300i	-	YTZ14S	TTZ14S	-	-
400	MAXSYM	-	YTZ14S	TTZ14S	-	-
SHANGHAI YAMAHA						
-	ES4 (for Brazil)	-	-	GTX7L-BS	-	-
SIMSON						
50	Albatros	97	-	-	-	12N5.5-3B
50	Albatros (Electric-Starter)	97	-	-	CB5L-B	-
50	Classic	96-97	-	-	-	12N5.5-3B
50	S51/1 B, C, E	-	-	-	-	12N5.5-3B
50	S53	93-95	-	-	-	12N5.5-3B
50	SD CT, CTE	95	-	-	-	12N5.5-3B
50	SR50 1B, 1C	93-95	-	-	-	12N5.5-3B
50	SR50 2CE (Electric-Starter)	93	-	-	CB5L-B	-
50	SR50 CC	94	-	-	-	12N5.5-3B
50	SR50 CCE (Electric-Starter)	94	-	-	CB5L-B	-
50	SR50 M, XC, XG	94-95	-	-	-	12N5.5-3B
50	SR50 XCE, XGE (Electric-Starter)	95	-	-	CB5L-B	-
80	Classic	96-97	-	-	-	12N5.5-3B
80	S83	93-95	-	-	-	12N5.5-3B
80	SR80 1B, 1C, CC	93-95	-	-	-	12N5.5-3B
80	SR80 2CE (Electric-Starter)	93	-	-	CB5L-B	-
80	SR80 CCE (Electric-Starter)	94	-	-	CB5L-B	-
80	SR80 XCE, XGE	95	-	-	CB5L-B	-

Объем	Модель	Год	High Performance AGM / Premium AGM	Maintenance Free	Heavy Duty	Conventional
SUNDIRO HONDA						
50	SDH50QT 16	-	-	-	CB4L-B	-
50	Today	-	-	GTX4L-BS	-	-
100	SDH100-41	-	-	-	CB5L-B	-
100	WAVE	-	-	-	CB5L-B	-
100	100-6B/6G	-	-	GTX7A-BS	-	-
125	125T-2D / 8D	-	-	GTX7A-BS	-	-
125	SDH125	-	-	GTX7L-BS / GTX7A-BS	-	12N9-4B-1
125	SDH125-6	-	-	-	-	12N7A-3A
SUZUKI						
50	A50KM	92	-	-	-	6N4-2A-4
50	AC50, AS50	71	-	-	-	6N4-2A
50	AD50	91-95	GTX4L-BS	GT4L-BS	-	-
50	Address 50	-97	GTX4L-BS	GT4L-BS	-	-
50	Address V 50	08-	-	GT4L-BS	-	-
50	AE50, 50M	91-95	GTX4L-BS	GT4L-BS	-	-
50	AG50T	95	GTX4L-BS	GT4L-BS	-	-
50	AH50	92-95	GTX4L-BS	GT4L-BS	-	-
50	AJ50	95	GTX4L-BS	GT4L-BS	-	-
50	AJ50 ZZS	-02	-	GT4B-BS	-	-
50	AP50, R7	94-	GTX4L-BS	GT4L-BS	-	-
50	AY50, W, WR Katana	-98	-	GT4B-BS	-	-
50	AZ50	06	-	GT4B-BS	-	-
50	AZ50 (Lets II ZZ)	-02	-	GT4B-BS	-	-
50	CP50	85-95	-	GTX4L-BS	-	-
50	DR-Z50	08-	-	GT4B-BS	-	-
50	F50, F50R	71	-	-	-	6N4-2A
50	FA50 Shuttle	80-91	-	-	-	6N2-2A-4
50	FB50, M	91-95	GTX4L-BS	GT4L-BS	-	-
50	FE50	-	-	GTX4L-BS	-	-
50	FS50, FZ50	79-83	-	-	-	6N4-2A
50	GS50	-	-	GTX4L-BS	-	-
50	GT50E, K, KE, U	77-80	-	-	-	6N4B-2A
50	Katana 50LC	97	GTX4L-BS	GT4L-BS	-	-
50	Let’s 4, Pallet, Basket	04-	-	GT4L-BS	-	-
50	OR50	79-80	-	-	-	6N4B-2A
50	Birdie 50	04-	-	GT4L-BS	-	-
50	RB50	91	-	-	-	6N4-2A
50	RC50	-02	GTX4L-BS	GT4L-BS	-	-
50	RG50	91	-	-	CB4L-B	-
50	RV50	-81	-	-	-	6N4B-2A
50	Sepia 50	97-	-	GT4B-BS	-	-
50	Sport 50 (Model M12)	68	-	-	-	6N4-2A
50	TR50 Street Magic	-02	-	GT4B-BS	-	-
50	TR50S	98	-	GT4B-BS	-	-
50	TS50	74	-	-	-	6N4-2A
50	TS50ERK, K	78-81	-	-	-	6N4B-2A
50	TS50W, XA, XK	91	-	-	CB4L-B	-
50	Tune 50	97-	-	GTX4L-BS	-	-
50	UR50 (Velde)	-02	-	GT4B-BS	-	-
50	UX50 W Zillion	99	-	GTX4L-BS	-	-
50	UZ50X	06	-	GTX4L-BS	-	-
50	X5	-	-	GTX4L-BS	-	-
50	YR50	-02	-	GT4B-BS	-	-
50	Zilion	-	-	GTX4L-BS	-	-
50	ZR50K, KE	79	-	-	-	6N4B-2A
50	ZZ50	97	-	GTX4L-BS	-	-
55	Model 31	68	-	-	-	6N2-2A-4
70	DRZ70	08	-	GT4B-BS	-	-
75	TS75 Colt	75-77	-	-	-	6N4-2A

Объем	Модель	Год	High Performance AGM / Premium AGM	Maintenance Free	Heavy Duty	Conventional
SUZUKI продолжение						
80	A80	92	-	-	-	6N4-2A
80	CP80	92	-	-	CB5L-B	-
80	DG80	91	-	-	CB4L-B	-
80	FB80, M	91-95	GTX4L-BS	GT4L-BS	-	-
80	FB80D	95	-	GTX5L-BS	-	-
80	FR80	95	GTX4L-BS	GT4L-BS	-	-
80	GT80E, EX, L, LX	-81	-	-	-	6N4B-2A
80	RG80, C	85-95	-	-	CB4L-B	-
80	Sport 80 (Models K11 & K11P)	68	-	-	-	6N4-2A
80	Trail 80 (Models K15 & K15P)	68	-	-	-	6N4-2A
80	TS80ER	91	-	-	-	6N4B-2A
80	TS80X	84-87	-	-	CB4L-B	-
90	CS90G	91	-	-	CB5L-B	-
90	FB90	-02	GTX4L-BS	GT4L-BS	-	-
90	Model K10, Model K10P	68	-	-	-	6N4-2A
90	RV90 Rover	72	-	-	-	6N2-2A-4
90	RV90 Rover	73-77	-	-	-	6N4B-2A
90	RV90 Rover, Vanvan	-92	-	-	-	6N4B-2A
90	TC90	-	-	-	-	6N4-2A
90	TC90J, TC90R	-	-	-	-	6N2-2A-4
90	TS90	-	-	-	-	6N4-2A
90	TS90J, R	-	-	-	-	6N2-2A-4
100	A100 Go-fer	69-91	-	-	-	6N4-2A
100	AG100	91-95	-	GTX5L-BS	-	-
100	AH100 Address	95-96	-	GTX5L-BS	-	-
100	AX100	91	-	-	-	6N4-2A
100	B100P	91	-	-	-	6N4-2A
100	FB100	91	-	-	CB5L-B	-
100	GP100V	91	-	-	-	6N4-2A
100	GT100	92	-	-	-	6N4B-2A
100	Scrambler AC100	69	-	-	-	6N4-2A
100	SP100	83	-	-	-	6N4B-2A
100	Sport AS100	69	-	-	-	6N4-2A
100	TC100 Blazer	73-77	-	-	-	6N4-2A
100	TS100 Honcho	73-77	-	-	-	6N4-2A
100	TS100 Honcho	78-81	-	-	-	6N4B-2A
105	B105P	-	-	-	-	6N4-2A
110	Hokuto	-	-	GTX5L-BS	-	-
110	UG110 Hokuto	00	-	GTX5L-BS	-	-
120	B120P	-	-	-	-	6N4-2A
120	TC120, TC120-II, TC120R	71	-	-	-	6N4B-2A
125	AN125 (Vecstar)	-02	-	GTX7A-BS	-	-
125	RV125 Tracker	-02	-	GTX7L-BS	-	-
125	SP125	82-83	-	-	-	6N4B-2A
125	AN125 (Vecstar)	95-96	-	GTX7A-BS	-	-
125	Burgman	-	-	GTX9-BS	-	-
125	DN125	91	-	-	CB7-A	-
125	DR125, D, S	-	-	GTX4L-BS	-	-
125	DR125, SE, SES	94-96	-	GTX7L-BS	-	-
125	DR125R, SZ	91	-	-	-	6N4-2A
125	DR125SE	94-97	-	GTX7A-BS	-	-
125	DZ125	-02	-	GTX7L-BS	-	-
125	EN125	-	-	-	CB7-A	-
125	Epicuro	-	-	GTX7A-BS	-	-
125	GN125	-	-	-	CB7-A	-
125	GN125, E	82-83	-	-	CB7-A	-
125	GN125, E	91-96	-	-	CB7-A	-
125	GN125, E, U	82-98	-	-	CB7-A	-
125	GP125, U	78	-	-	-	6N4-2A

Объем	Модель	Год	High Performance AGM / Premium AGM	Maintenance Free	Heavy Duty	Conventional
SUZUKI продолжение						
125	GS125ES	91-92	-	-	CB7-A	-
125	GS125S	-99	-	-	CB7-A	-
125	GT125, E, T, ET	74-79	-	-	-	12N5-3B
125	GZ125 Marauder	99	-	GTX7L-BS	-	-
125	HJ125	-	-	-	-	12N7A-3A
125	HJ125J	-	-	-	CB7-A	-
125	HJ125T-9	-	-	GTX7A-BS	-	-
125	HS125T	-	-	GTX7L-BS	-	-
125	K125	91	-	-	CB10L-B	-
125	PG125 Gamma	-	-	GTX5L-BS	-	-
125	RG125, F	92-95	-	GTX7L-BS	-	-
125	RV125 SE, R	94	-	GTX7L-BS	-	-
125	RV125 SE, R	94	-	GTX7L-BS	-	-
125	RV125 Tracker	73-77	-	-	-	6N4-2A
125	RV125 Tracker	79-92	-	-	-	6N4-2A
125	SP125	82-83	-	-	-	6N4B-2A
125	SP125	86-88	-	-	-	6N4-2A
125	TC125 Prospector	73-77	-	-	-	6N4B-2A
125	TF125	-02	-	-	-	6N4B-2A
125	TS125 Duster, ER	71-92	-	-	-	6N4B-2A
125	TS125R, SZ	91-92	-	GTX4L-BS	-	-
125	TS125X	92	-	-	CB4L-B	-
125	VL125	-02	-	GTX7L-BS	-	-
150	AN150	-02	-	GTX7A-BS	-	-
150	Burgman	-	-	GTX9-BS	-	-
150	UC150 Epicuro	99	-	GTX7A-BS	-	-
185	GT185 Adventurer (6V)	73-77	-	-	-	6N2-2A-4
185	GT185 Adventurer (12V)	73-77	-	-	-	12N11-3A-1
185	GT185, E (Electric-Starter)	73-78	-	-	-	12N11-3A-1
185	TC185 Ranger	74-77	-	-	-	12N11-3A-1
185	TC185 Suerra	77-81	-	-	-	6N4B-2A
185	TC185 Suerra	71-76	-	-	-	6N4-2A
185	TF185	-	-	-	-	6N4B-2A
185	TS185 Sierra	71-76	-	-	-	6N4-2A
185	TS185 Sierra	77-81	-	-	-	6N4B-2A
185	TS185ER	-02	-	GTX4L-BS	-	-
185	TS185ER	79	-	-	-	6N4B-2A
200	B200	91	-	-	-	12N7-4A
200	DR200SE, E	96-13	-	GTX7L-BS	-	-
200	GT200N, EN	79	-	-	CB7-A	-
200	RV200	-02	-	GTX7L-BS	-	-
200	SP200	86-88	-	-	CB4L-B	-
200	T200, TC200	-	-	-	CB5L-B	12N5-3B
200	TS200R, RM	91-92	GTX4L-BS	GT4L-BS	-	-
200	Van Van 200	02-	-	GTX7L-BS	-	-
250	AN250 Burgman	02-	-	GT12A-BS	-	-
250	AN250 Burgman	99	-	GTX7A-BS	-	-
250	AN250 Sky Wave	98	-	GTX7A-BS	-	-
250	Big Boy	-02	-	-	CB10L-A2	-
250	DR250	-01	YTZ7S	GTX5L-BS	-	-
250	DR250S	-87	-	-	CB4L-B	-
250	DR250S	90-92	-	GTX4L-BS	-	-
250	DR250S (Europe)	90-95	-	GTX7L-BS	-	-
250	DR250S EP, ER, ES	93-95	-	GTX7L-BS	-	-
250	DR-Z250	01-07	YTZ7S	-	-	-
250	Gemma	08-	Not Available	-	-	-
250	Glass Tracker	-02	-	-	CB10L-A2	-
250	Glass Tracker Big Boy	04-	-	GTX7L-BS	-	-
250	GN250, E	82-98	-	-	CB10L-A2	-
250	GNX250, E	85-92	-	-	CB10L-A2	-

Объем	Модель	Год	High Performance AGM / Premium AGM	Maintenance Free	Heavy Duty	Conventional
SUZUKI продолжение						
250	GS250T	80-81	-	-	CB10L-A2	-
250	GSF250	95	-	GTX7A-BS	-	-
250	GSX250, ES, EZ	82-92	-	-	CB12B-B2	-
250	GSX250, ET	80-81	-	-	CB10L-A2	-
250	GSX250F, S	91-95	-	GTX7A-BS	-	-
250	GT250, E Hustler	73-77	-	-	CB5L-B	12N5-3B
250	GT250ET	94	-	-	CB10L-A2	-
250	GZ250	99-12	-	GTX7L-BS	-	-
250	GZ250 Marauder	99-03	-	GTX7L-BS	-	-
250	Model T20	69	-	-	CB5L-B	12N5-3B
250	RG250C, E, FC	-92	-	-	-	12N5-3B
250	RGV250	89-93	GTX4L-BS	GT4L-BS	-	-
250	Scrambler TC250	69	-	-	CB5L-B	12N5-3B
250	Skywave 250	-	Not Available	-	-	-
250	SP250	92	-	-	CB4L-B	-
250	SP250	82-85	-	-	-	6N4B-2A
250	ST250, E type	-	-	GTX7L-BS	-	-
250	T250, T250-II, T250J, T250R	72	-	-	CB5L-B	12N5-3B
250	TS250	92	-	-	-	6N4B-2A
250	TS250 Savage	69-72	-	-	-	6N2-2A-4
250	TS250 Savage	73-81	-	-	-	6N4B-2A
250	TS250X	-94	-	-	CB4L-B	-
250	TU250G	-	-	GTX7L-BS	-	-
250	TU250X	95-99	-	-	CB10L-A2	-
250	TU250X	01-09	-	GTX7L-BS	-	-
250	VL250	-02	-	GTX7L-BS	-	-
250	Volty	-02	-	-	CB10L-A2	-
300	GS300L	82-85	-	-	CB12B-B2	-
305	Scramble TC305	69	-	-	CB5L-B	12N5-3B
305	T305	69	-	-	CB5L-B	12N5-3B
350	DR350S	90-96	-	GTX4L-BS	-	-
350	DR350S, SH	90-93	GTX4L-BS	GT4L-BS	-	-
350	DR350SE	94-99	-	GTX7L-BS	-	-
350	T350 Series	79	-	-	CB5L-B	12N5-3B
370	SP370	78-79	-	-	-	6N4B-2A
380	GT380 Sebring	72-77	-	-	CB7-A	12N7-4A
400	AN400 Burgman	03-08	-	GT12A-BS	-	-
400	AN400 Burgman	99-02	-	GTX9-BS	-	-
400	Boulevard 400	06-	-	GTX12-BS	-	-
400	DR400S	92	-	-	-	6N4B-2A
400	DR-Z400, E, S, SM	00-13	-	GT7B-BS	-	-
400	Gladius 400 ABS	09-	-	GT12A-BS	-	-
400	GN400, L, T, TD, X	80-92	-	-	-	6N4B-2A-3
400	GN400T, X	80-82	-	-	-	6N4B-2A
400	GS400 B/N	77-79	-	-	CB10L-A2	-
400	GS400, E	91	-	GTX9-BS	-	-
400	GS400X	91-95	-	GTX9-BS	-	-
400	GS400X	77-78	-	-	CB7-A	12N7-4A
400	GSF400 Bandit	91-93	-	GTX9-BS	-	-
400	GSF400 M	-	-	GTX9-BS	-	-
400	GSR400	06-07	-	GT12A-BS	-	-
400	GSR400 ABS	07-	-	GTX9-BS	-	-
400	GSX400	-	-	GTX9-BS	-	-
400	GSX400 EZ	82	-	-	CB12B-B2	-
400	GSX400 X	87	-	-	CB10L-B2	-
400	GSX400E, ES, T, S	83-92	-	-	CB12B-B2	-
400	GSX400E, FE, FX, L, T, S	80-81	-	-	CB10L-A2	-
400	GSX400FS Inazuma	-02	-	GTX7A-BS	-	-
400	GSX400T, S, ES	82-93	-	-	CB10L-A2	-
400	GSX-R400R, RF	91-95	-	GTX9-BS	-	-

Объем	Модель	Год	High Performance AGM / Premium AGM	Maintenance Free	Heavy Duty	Conventional
SUZUKI продолжение						
400	Intruder Classic 400	08-	-	GTX12-BS	-	-
400	Skywave 400	02-	Not Available	-	-	-
400	SP400	80-92	-	-	-	6N4B-2A
400	SV400S	-02	-	GTX9-BS	-	-
400	TS400 Apache (Electric-Starter)	72-75	-	-	CB5L-B	12N5-3B
400	TS400 Apache	76-77	-	-	-	6N4B-2A
400	TS400T	92	-	-	CB10L-A2	-
400	VL400	-	-	GTX12-BS	-	-
400	VZ400	-02	-	GTX7A-BS	-	-
425	GS425, E, L	79	-	-	CB10L-A2	-
450	GS450, E	83-88	-	-	CB12B-B2	-
450	GS450, E	80-82	-	-	CB10L-A2	-
450	GS450GA	82-83	-	-	CB12B-B2	-
450	GS450L	83-86	-	-	CB12B-B2	-
450	GS450L	80-82	-	-	CB10L-A2	-
450	GS450S	-88	-	-	CB12B-B2	-
450	GS450T, TU	81-82	-	-	CB10L-A2	-
450	GS450TX	83	-	-	CB12B-B2	-
450	GS450TX	82	-	-	CB10L-A2	-
500	DR500, S	81-83	-	-	-	6N4B-2A-3
500	DR500S	92	-	-	CB4L-B	-
500	GS500	01-04	-	-	CB10L-A2	-
500	GS500, F	01-07	-	-	CB10L-B2	-
500	GS500E	89-04	-	-	CB10L-A2	-
500	GS500E, EU	89-00	-	-	CB10L-B2	-
500	GS500EN	-	-	-	CB10L-A2	-
500	GS500F	04-	-	-	CB10L-A2	-
500	GT500 Titan	76-77	-	-	CB7-A	12N7-4A
500	GT500B	92	-	-	CB10L-A2	-
500	RG500 Gamma	-94	-	GTX5L-BS	-	-
500	SP500	92	-	-	CB4L-B	-
500	SP500	81-83	-	-	-	6N4B-2A
500	T500 Titan	68-92	-	-	CB7-A	12N7-4A
550	GS550, D, E, EG, L, M, T	77-82	-	-	CB10L-A2	-
550	GS550E, ES, L	83-86	-	-	CB10L-B	-
550	GSX550	94	-	-	CB10L-B	-
550	GSX550E, L, ES, EF, EV	-92	-	-	CB10L-B	-
550	GT550 Indy	72-77	-	-	-	12N11-3A-1
550	GT550A, B, K, L, M	73-77	-	-	-	12N11-3A-1
550	GT550J, K, L, M	-92	-	-	CB10L-A2	-
600	DR600R, RU, S, SU	85-89	-	-	-	12N5-3B
600	GSF600, S, SU, U, U II	95-	-	GTX9-BS	-	-
600	GSF600S Bandit	96-03	-	GTX9-BS	-	-
600	GSR600	-03	-	GTX9-BS	-	-
600	GSX600F Katana	88-97	-	-	CB10L-B2	-
600	GSX600F Katana	98-06	-	GTX9-BS	-	-
600	GSX-R600	97-13	-	GTX9-BS	-	-
600	GSX-R600W	92-93		GTX9-BS	-	-
600	RF600R, RU, S	93-97	-	GTX9-BS	-	-
600	SP600	85	-	-	CB5L-B	12N5-3B
600	SP6600	-85	-	-	-	12N5-3B
600	VS600 GLS	-	-	GTX9-BS	-	-
600	VS600GLF	95-97	-	-	CB16B-A	-
600	GSX-R600	11-	-	GTX9-BS	-	-
650	AN650 Burgman	03-09	GTX14H-BS	GTX14-BS	-	-
650	DL650 V-Strom ABS, Adventure	01-04	-	GTX12-BS	-	-
650	DR650R, RU	90-91	-	-	CB5L-B	-
650	DR650R, RU	92-94	GTX4L-BS	GT4L-BS	-	-
650	DR650RE, REU	94-95	-	GTX12-BS	-	-
650	DR650RS, RSU	90-91	-	-	CB5L-B	-

Объем	Модель	Год	High Performance AGM / Premium AGM	Maintenance Free	Heavy Duty	Conventional
SUZUKI продолжение						
650	DR650RSE, RSEU	91-	-	GTX14-BS	-	-
650	DR650S	90-91	-	-	CB5L-B	12N5-3B
650	DR650S ER, ES	94-95	-	GTX12-BS	-	-
650	DR650S N, P	92-93	-	GTX4L-BS	-	-
650	DR650SE	96-97	-	-	CB10L-B2	-
650	DR650SE	98-13	-	GTX9-BS	-	-
650	DR650SE (CN)	96-97	-	GTX9-BS	-	-
650	DR650SE, SEU	91-04	-	GTX9-BS	-	-
650	DR650SES	95-	-	GTX12-BS	-	-
650	GR650 Tempter, X	83	-	GTX14AL-BS	CB14L-A2	-
650	GS650, E, G, GLX, GTZ	81-83	-	GTX14AL-BS	CB14L-A2	-
650	GS650EX	83-92	-	-	CB10L-A2	-
650	GSF650/U	-	-	GTX9-BS	-	-
650	GSX650/F	-	-	GTX9-BS	-	-
650	LS650 Savage, S40	86-13	-	GTX14AL-BS	CB14L-B2	-
650	LS650, F, P Savage	-03	-	-	CB14L-B2	-
650	LS650, F, P Savage	95-01	-	-	CB14L-B2	-
650	LS650, F, P Savage	86-94	-	-	CB14L-B2	-
650	Skywave 650LX	05-	Not Available	-	-	-
650	SV650	99-02	-	GT12A-BS	-	-
650	SV650, A, SA	03-10	-	GT12A-BS	-	-
650	SV650, S	83-13	-	GTX12-BS	-	-
650	SFV650 Gladius	09-10	-	GT12A-BS	-	-
650	XF650 Freewind	-02	-	GTX9-BS	-	-
650	XN85 Turbo	83-92	-	GTX14AL-BS	CB14L-A2	-
700	GS700E, GS700ES	85	-	GTX14AL-BS	CB14L-A2	-
700	GV700GL Madura	85	-	GTX14AL-BS	CB14L-B2	-
750	DR750S, SU Big	88-89	-	-	CB14L-B2	-
750	GS750, D, E, ES, L, S, T, Katana	77-83	-	GTX14AL-BS	CB14L-A2	-
750	GSX750, E, EF, ES, L	80-86	-	-	CB14L-A2	-
750	GSX750EG Silver Suzi	80	-	-	CB14L-A2	-
750	GSX750F Katana	89-97	-	GTX14AL-BS	CB14L-B2	-
750	GSX750F Katana	98-06	-	GTX9-BS	-	-
750	GSX750P	-	-	GTX12-BS	-	-
750	GSX750S Katana	82	-	-	CB14L-A2	-
750	GSX-R750	00-13	-	GT12A-BS	-	-
750	GSX-R750	96-99	-	GTX9-BS	-	-
750	GSX-R750	86-92	-	GTX14AL-BS	CB14L-A2	-
750	GSX-R750, W	92-93	-	GTX12-BS	-	-
750	GSX-R750, W	94-95	-	GTX9-BS	-	-
750	GT750 Le Mans	72-77	-	GTX14AL-BS	CB14L-A2	-
800	DR800S, SU Big	90-97	-	GTX14-BS	-	-
800	DR800ST	92	-	-	CB14L-B2	-
800	VL800 Intruder Volusia, Boulevard C50, T, M50	01-08	-	GTX12-BS	-	-
800	VX800	90-93	-	-	CB16B-A	-
800	VZ800 Marauder	97-08	-	GTX12-BS	-	-
850	GS850G, GL, GT, GZ	79-83	-	GTX14AL-BS	CB14L-A2	-
850	X1-E	92	-	-	-	6N4-2A
900	RF900, R, RR, S, ZS	94-97	-	GTX9-BS	-	-
1000	DL1000	-02	-	GTX14-BS	-	-
1000	DL1000 V-Strom	01-02	GTX14H-BS	GTX14-BS	-	-
1000	GS1000, E, G, GL, H, L, S	78-82	-	GTX14AL-BS	CB14L-A2	-
1000	GSX-R1000	01-04	-	GTX12-BS	-	-
1000	GSX-R1000	01-05	-	GT12A-BS	-	-
1000	SV1000, S	03-07	-	GTX14-BS	-	-
1000	TL1000R	98-03	-	GT12A-BS	-	-
1000	TL1000S	97-01	-	GTX12-BS	-	-
1100	GS1100, E, EF, ES, EX	80-86	-	-	SCB14L-A2	-
1100	GS1100G	91-95	-	GTX14-BS	-	-
1100	GS1100G, K, L, Katana	82-86	-	GTX14AL-BS	CB14L-A2	-

Объем	Модель	Год	High Performance AGM / Premium AGM	Maintenance Free	Heavy Duty	Conventional
SUZUKI продолжение						
1100	GSX1100F Katana	88-94	-	GTX14AL-BS	CB14L-B2	-
1100	GSX1100G	91-93	-	GTX14-BS	-	-
1100	GSX1100L	80	-	-	SCB14L-A2	-
1100	GSX1100S Katana	82	-	-	SCB14L-A2	-
1100	GSX1100SZ	82	-	-	CB14L-A2	-
1100	GSX-R1100	86-92	-	GTX14AL-BS	CB14L-A2	-
1100	GSX-R1100	93-98	-	GTX12-BS	-	-
1100	GSX-R1100W	93-99	-	GTX12-BS	-	-
1100	TL1000R, S	98-03	-	GT12A-BS	-	-
1100	TL1000S V	97-01	-	GTX12-BS	-	-
1150	GS1150E, ES, S	83-86	-	-	CB14L-B2	-
1200	Bandit 1200S	-	-	GTX12-BS	-	-
1200	GS1200SS	-02	-	GTX12-BS	-	-
1200	GSF1200, S, SA Bandit	97-06	GTX12-BS	GT12A-BS	-	-
1200	GSX1200	99-00	-	GTX12-BS	-	-
1200	GV1200GL Marauder	85-86	-	GTX14AL-BS	CB14L-B2	-
1250	GSF1250/S	-	-	GT12A-BS	-	-
1250	GSF1250S, A Bandit	07-08	-	GT12A-BS	-	-
1250	GFS1250-FA	11-	-	GT12A-BS	-	-
1250	GSX1250S, A Bandit, FA	01-07		GT12A-BS	-	-
1300	GSX1300BK B-King	08	-	GTX12-BS	-	-
1300	GSX1300R Hayabusa	99-07	-	GT12A-BS	-	-
1300	GSX1300R, Z Hayabusa	01-08	-	GTX12-BS	-	-
1400	GSX1400	-02	-	GTX14-BS	-	-
1400	GV1400GC, D, T Cavalcade	86-88	-	-	SC50-N18L-AT	-
1400	VS1400GL Intruder, GLP, S83	87-08	-	GTX16-BS-1	-	-
1400	VS1400GLF, GLP	88-03	-	GTX16-BS-1	-	-
1500	VL1500 Intruder, C90, T	98-08	-	GTX16-BS-1	-	-
1500	VZ1500 Boulevard M90	01-09	GTX20CH-BS	-	-	-
1600	Marauder, Boulevard M95	04-05	GTX20CH-BS	GTX16-BS	-	-
1800	VLR1800	-	GTX20CH-BS	-	-	-
1800	VLR1800 (C109R)	08-12	GTX20CH-BS	-	-	-
1800	VZR1800 (M109R)	01-06	GTX20CH-BS	-	-	-
TGB/WINKING						
50	50 Akros	97	GTX4L-BS	GT4L-BS	-	-
50	50 Ergon	97	GTX4L-BS	GT4L-BS	-	-
50	AS25 Bunny	96	-	-	CB4L-B	-
50	AS50 X Bunny	94-95	-	-	CB4L-B	-
50	AS50 X Kurier	95	-	-	CB4L-B	-
50	AT50 Bunny	93	-	-	CB4L-B	-
50	AT50 Bunny Gespann	93-94	-	-	CB4L-B	-
TRIUMPH						
120	Bonneville	-	-	-	-	12N7-3B
150	T150	-	-	-	-	12N7-4A
150	Trident	-	-	-	-	12N7-3B
173	Tigress	-	-	-	-	6N11A-1B
200	Tiger	-	-	-	-	6N11A-1B
250	T250	-	-	-	-	12N7-4A
250	Tigress (12V)	-	-	-	-	6N11A-1B (x 2 pcs.)
250	Tigress (6V)	-	-	-	-	6N11A-1B
350	350 (12V)	-	-	-	-	B39-6 (x 2 pcs.)
350	350 (6V)	-	-	-	-	6N11A-1B
350	350 3TA, Twenty One	-	-	-	-	B38-6A
500	500 (12V)	-	-	-	-	B39-6 (x 2 pcs.)
500	5TA, TR5A/R	-	-	-	-	6N11A-1B
600	600 (12V)	-	-	-	-	B39-6 (x 2pcs.)
600	6T, T20B	-	-	-	-	6N11A-1B
600	Daytona 600/650, Speed Four	03-05	-	GTX9-BS	-	-

Объем	Модель	Год	High Performance AGM / Premium AGM	Maintenance Free	Heavy Duty	Conventional
TRIUMPH продолжение						
600	TT600	00-03	-	GTX12-BS	-	-
650	600	-	-	-	-	B39-6 (x 2pcs.)
650	600 (12V)	-	-	-	-	B39-6 (x 2 pcs.)
650	6T, T20B	-	-	-	-	6N11A-1B
650	T120 Bonneville	-	-	-	CB7L-B	-
675	Daytona 675	06-	-	GT7B-BS	-	-
675	Daytona 675	08-	-	GTX9-BS	-	-
675	Street Triple	07-	-	GTX9-BS	-	-
675	Street Triple R	08-	-	GTX9-BS	-	-
750	Bonneville, Tiger	-	-	-	CB9-B	12N9-4B-1
750	Daytona/Trident	93-00	-	-	CB14L-A2	-
750	Speed Triple	97	-	-	CB14L-A2	-
750	T150 Trident	-	-	-	CB7L-B	-
750	T750	-	-	-	-	12N7-4A
750	All Other Models	93-97	-	GTX14AL-BS	-	-
800	Bonneville	01-05	-	GTX12-BS	-	-
800	Speedmaster	03-05	-	GTX12-BS	-	-
865	America	09-	-	GTX12-BS	-	-
865	Bonneville T100, SE	05-07	-	GTX12-BS	-	-
865	Bonneville T100, SE,FI	08-10	-	GT12B-BS	-	-
865	Bonneville T100, SE, FI	11-	-	GTX12-BS	-	-
865	Scrambler	05-07	-	GTX12-BS	-	-
865	Scrambler	08-10	-	GT12B-BS	-	-
865	Scrambler	11-	-	GTX12-BS	-	-
865	Speedmaster	09-	-	GTX12-BS	-	-
865	Thruxton	09-	-	GTX12-BS	-	-
885	Legend TT	99-02	-	-	CB14L-A2	-
885	T509 Speed Triple	-	-	-	CB14L-A2	-
885	Thunderbird Sport	-	-	GTX14-BS	-	-
885	Tiger	-98	-	-	CB14L-A2	-
885	Tiger	99-01	-	GTX14-BS	-	-
885	Trophy	-	-	-	CB14L-A2	-
900	Adventurer	96-02	-	-	CB14L-A2	-
900	Daytona	93-99	-	-	CB14L-A2	-
900	Legend TT	98-	-	-	CB14L-A2	-
900	Scrambler, Bonneville	06-07	-	GTX12-BS	-	-
900	Speed Triple	94-00	-	-	CB14L-A2	-
900	Sport Sprint	98	-	-	CB14L-A2	-
900	Sprint	92-99	-	-	CB14L-A2	-
900	Super III	94-99	-	-	CB14L-A2	-
900	T509 Speed Triple	97-01	-	-	CB14L-A2	-
900	T90	-	-	-	-	6N11A-1B
900	Thruxton	03-07	-	GTX12-BS	-	-
900	Thunderbird	02-03	-	GTX14AL-BS	-	-
900	Thunderbird	95-02	-	-	CB14L-A2	-
900	Tiger	93-98	-	-	CB14L-A2	-
900	Tiger	99-01	-	GTX14-BS	-	-
900	Trident	91-00	-	-	CB14L-A2	-
900	Trident Sprint	93-96	-	-	CB14L-A2	-
900	Trophy	91-98	-	-	CB14L-A2	-
900	All Other Models	91-01	-	GTX14AL-BS	-	-
955	Daytona 955i, Speed Triple, Sprint ST, RS	99-04	-	GTX14-BS	-	-
955	Sprint RS	00-04	-	GTX14-BS	-	-
955	T595 Daytona	97-98	-	-	CB14L-A2	-
955	Tiger	02-06	-	GTX14-BS	-	-
955	All Other Models	96-97	-	GTX14AL-BS	-	-
956	Masterblaster	96-97	-	-	CB14L-A2	-
1000	Daytona	91-93	-	GTX14AL-BS	CB14L-A2	-
1050	Speed Triple	05-10	-	GTX12-BS	-	-
1050	Speed Triple	01-11	-	GTX14-BS	-	-

Объем	Модель	Год	High Performance AGM / Premium AGM	Maintenance Free	Heavy Duty	Conventional
TRIUMPH продолжение						
1050	Sprint GT	01-11	-	GTX14-BS	-	-
1050	Tiger	07-11	-	GT12B-BS	-	-
1050	Tiger Sport	01-12	-	GTX14-BS	-	-
1200	Daytona	93-99	-	-	CB14L-A2	-
1200	Trophy	00-04	-	GTX14-BS	-	-
1200	Trophy	91-98	-	-	CB14L-A2	-
1200	Trophy	13-	-	GTX20L-BS	-	-
1215	Trophy	01-12	-	GTX20L-BS	-	-
1215	Trophy SE	01-12	-	GTX20L-BS	-	-
1215	Tiger Explorer	01-12	-	GTX20L-BS	-	-
1700	Thunderbird	09-	-	GTX20L-BS	-	-
2300	Rocket 3	03-	-	GTX20L-BS	-	-
	All Other Models	93-99	-	GTX14AL-BS	-	-
VALPADANA						
850	Motori agricoli	89	-	-	C60-N24-A	-
VELOCETTE						
1200	350, 500, Early Venson	-	-	-	-	B38-6A
1200	Early Thruxton, Viper	-	-	-	-	B38-6A
1200	LE, Voque (12V)	-	-	-	-	B38-6A (x 2pcs.)
WuYang-HONDA						
100	WH100T	-	-	GTX5L-BS	-	-
125	WH125T	-	-	GTX9-BS	-	-
125	WH125T-2	-	-	GTX7L-BS	-	-
125	LEAD	-	-	GTX7L-BS	-	-
125	WY125-3,C,F	-	-	-	-	12N7A-3A
XinDaZhou HONDA						
50	REN50	-	-	GTX4L-BS	-	-
50	SDH50QT 16	-	-	-	CB4L-B	-
50	Today	-	-	GTX4L-BS	-	-
125	SDH125	-	-	-	-	12N9-4B-1
125	SDH125T-21,80	-	-	GTX7A-BS	-	-
YAMAHA						
50	Aero X R, Max	-	-	-	CB4L-B	-
50	Axis	-	-	GTX4L-BS	-	-
50	BA50, S, N, C	06-	GTX4L-BS	GT4L-BS	-	-
50	Beluga	-	-	-	CB4L-B	-
50	Breeze	-	-	-	CB4L-B	-
50	BWs Bump, Spy	99	-	-	CB4L-B	-
50	BWs Original	00	-	-	CB4L-B	-
50	BX50S	-	-	GTX5L-BS	-	-
50	CE50 Riva Jog	86-87	-	-	CB4L-B	-
50	CE50D	-	-	GTX5L-BS	-	-
50	CE50S Riva	86-87	-	-	CB4L-B	-
50	CG50, Riva	88-91	-	-	CB4L-B	-
50	CR50, Z	89-93	-	-	CB4L-B	-
50	CS50, Z	05	-	GTX4L-BS	-	-
50	CS50, M, Z	09-	-	GT4L-BS	-	-
50	CV50, ZR	84	-	GTX4L-BS	-	-
50	CV50A, R, ZR	04	-	GTX4L-BS	-	-
50	CW50 Zuma	89-90	-	-	CB4L-B	-
50	CW50 Zuma II	97-01	-	-	CB4L-B	-
50	CW50, RS, RSX BWs	91-97	-	-	CB4L-B	-
50	CW50L, LN, N, RS, RSP	04-09	-	-	CB4L-B	-
50	CW50, N, RS, RSP	09-	-	-	CB4L-B	-

Объем	Модель	Год	High Performance AGM / Premium AGM	Maintenance Free	Heavy Duty	Conventional
YAMAHA продолжение						
50	CW50RSP NG	96-97	-	-	CB4L-B	-
50	CY50 Riva Jog	92-01	-	GTX4L-BS	-	-
50	CY50, B, D, E, G, R, Z	89-95	-	GTX4L-BS	-	-
50	CY50R	09-	-	GT4L-BS	-	-
50	DT50 Enduro	88-90	-	-	-	6N4B-2A-3
50	DT50, M	80-81	-	-	-	6N4A-4D
50	DT50MX	82-87	-	-	-	6N4B-2A-3
50	DT50R	89-97	-	-	CB3L-A	-
50	EW50	05	-	-	CB4L-B	-
50	EW50N	05-	-	-	CB4L-B	-
50	FS1-DX	75-79	-	-	-	6N4A-4D
50	Gear BX50,N, Parking Stand	07-	-	GTX5L-BS	-	-
50	Jog 50Z	-	-	GT4B-BS	-	-
50	JOG, ZR	-12	YTZ7S	GTX5L-BS	-	-
50	LB-2M Chappy	79	-	-	-	6N4-2A-4
50	LB50P Chappy	78-82	-	-	-	6N4-2A-5
50	LC50 Champ	80-81	-	-	-	6N4-2A-5
50	LC50P Champ	80-81	-	-	-	6N4-2A-5
50	MJ50 Towny	82	-	-	-	6N4-2A-5
50	NEO'S	98	-	-	CB4L-B	-
50	NG	-	-	-	CB4L-B	-
50	Original	-	-	-	CB4L-B	-
50	QT50 Yamahopper	79-87	-	-	-	6N4-2A-5
50	RD50, DX, M	78-81	-	-	-	6N4A-4D
50	RD50M	82	-	-	-	6N4B-2A-3
50	RX50, Special	83-84	-	-	-	6N4-2A-5
50	RZ50	-	-	GT4B-BS	-	-
50	SG50 Sting	84	-	-	CB2.5L-C	-
50	SH50 Riva Razz	87-01	-	-	CB4L-B	-
50	SH50, E, D, M Riva	87-94	-	-	CB4L-B	-
50	Slider	00	-	-	CB4L-B	-
50	Spy	-	-	-	CB4L-B	-
50	STS/SS	-	-	-	CB4L-B	-
50	TTR50E, EY, EV	06-09	-	GT4B-BS	-	-
50	TY50M	80	-	-	-	6N4A-4D
50	TZR50	09-	-	GT4L-BS	-	-
50	V50D, N	93	-	GT4B-BS	-	-
50	VOX	-12	YTZ7S	GTX5L-BS	-	-
50	Why	99	-	-	CB4L-B	-
50	XC50 Vino Classic	06-12	YTZ7S	GTX5L-BS	-	-
50	XC50, D	04	-	GTX5L-BS	-	-
50	XF50	07-09	-	GTX5L-BS	-	-
50	XF50W (C3)	07-12	YTZ7S	GTX5L-BS	-	-
50	YA50R Axis	96-	GTX4L-BS	GT4L-BS	-	-
50	YA50T	93	GTX4L-BS	GT4L-BS	-	-
50	YB-1	-	-	GT4B-BS	-	-
50	YB50	98	-	-	-	6N4-2A-2
50	YB50	-	-	GT4B-BS	-	-
50	YE50 Zest	93-97	-	-	CB4L-B	-
50	YH50	09-	-	-	CB4L-B	-
50	YL50	-	-	GTX4L-BS	-	-
50	YM50 Breeze	95-96	-	-	CB4L-B	-
50	YN50, M	09-	-	-	CB4L-B	
50	YN50F	09-	-	-	CB5L-B	
50	YQ50, L	05-	-	-	CB4L-B	-
50	YSR50	87-92	-	-	-	6N4-2A-5
50	YV50H	06	-	GT4B-BS	-	-
50	YW50A Zuma	02-12	YTZ7S	GTX5L-BS	-	-
50	YZ50, D, ZS	-	-	GT4B-BS	-	-
60	JT2 Mini Enduro	72	-	-	-	6N2-2A-3

Объем	Модель	Год	High Performance AGM / Premium AGM	Maintenance Free	Heavy Duty	Conventional
YAMAHA продолжение						
60	RD60	73-75	-	-	-	6N4A-4D
65	CW65	94	-	-	CB4L-B	-
80	CV80 Riva	83-87	-	-	-	6N11-2D
80	DT80 Mini Enduro	81-83	-	-	-	6N4-2A-5
80	DT80LC, LC II	83-96	-	-	CB3L-B	-
80	DT80MX, MXS	81-83	-	-	-	6N4-2A-5
80	FS 1DX80	80	-	-	-	6N4A-4D
80	FS80SE	81	-	-	-	6N4A-4D
80	G6S, G6SB	70-71	-	-	-	6N4A-4D
80	G7S	72	-	-	-	6N4A-4D
80	GT1 Mini Enduro	73	-	-	-	6N4-2A-5
80	GT80 Mini Enduro	74-80	-	-	-	6N4-2A-5
80	LB80 Chappy	76-78	-	-	-	6N4-2A-5
80	LB80-2A	95	-	-	-	6N4-2A-5
80	RD80LC	82	-	-	-	6N4A-4D
80	RD80LC II	83-86	-	-	CB3L-B	-
80	RD80MX	81-82	-	-	-	6N4B-2A-3
80	RX80SE	82	-	-	-	6N4-2A-4
80	SV80	88-90	-	-	-	12N7-3B
80	TZR80, D	91-	GTX4L-BS	GT4L-BS	-	-
80	YE80 Zesyt	94-96	-	-	CB4L-B	-
80	YG1	62-66	-	-	-	6N4A-4D
80	YG5T, YG5S	68-69	-	-	CB7L-B	12N7-3B
80	YSR80, B, D	92	-	-	-	6N4-2A-5
90	CR90	91	-	-	CB4L-B	-
90	HS1, HS1B	70-71	-	-	-	12N5.5-3B
90	HT1, HT1B 90 Enduro	70-71	-	-	-	6N2-2A-3
90	T90D, N	-	-	GTX4L-BS	-	-
90	TTR90E, EV (Electric Starter)	03-07	-	GT4B-BS	-	-
90	YA90	93-	GTX4L-BS	GT4L-BS	-	-
100	Aero X100	00	-	GTX4L-BS	-	-
100	AG100E, F	93-	-	-	-	6N4-2A-4
100	BWs100	99	-	GTX5L-BS	-	-
100	DT100 Enduro	74-76	-	-	-	6N4B-2A-3
100	DT100 Enduro	77-83	-	-	-	6N4-2A-5
100	L5T, L5TA	69-70	-	-	CB7L-B	12N7-3B
100	LS2	72	-	-	-	12N5.5A-3B
100	LT2, LT3 100 Enduro	72-73	-	-	-	6N4A-4D
100	Neo’s 100	00	-	GTX4L-BS	-	-
100	RS100	75-76	-	-	-	6N4A-4D
100	RS100, DX	79-81	-	-	-	6N4-2A-4
100	RS100T	95	-	-	-	6N4A-4D
100	RXZ100S	95	-	-	-	6N4A-4D
100	TQ100	01	GTX4L-BS	GT4L-BS	-	-
100	V100	93-94	-	-	CB3L-B	-
100	V100E	93-94	-	-	CB5L-B	-
100	XC100	07	-	GT7B-BS	-	-
100	YB100	07	-	-	CB2.5L-C	-
100	YFA-1 Breeze	89-95	-	-	CB12C-A	-
100	YL2C/CM	68	-	-	CB7L-B	12N7-3B
100	YN100	09-	-	GT4L-BS	-	-
100	YT100 (Taiwan)	99	-	GTX5L-BS	-	-
100	YW100EL	09-	-	GT4L-BS	-	-
105	T105E, SE	-	-	-	-	12N5-3B
110	T110S, SE, SEC, LSE	-	-	-	CB5L-B	12N5-3B
110	TTR110EX, EY, EX	-	-	GT4B-BS	-	-
110	V110, E	93-95	-	-	CB5L-B	-
110	YBR110A	-	-	-	CB5L-B	-
115	AL115, C, F	-	-	-	CB5L-B	-
115	RT115	93	-	-	-	6N4-2A-4

Объем	Модель	Год	High Performance AGM / Premium AGM	Maintenance Free	Heavy Duty	Conventional
YAMAHA продолжение						
115	RTX115	93	-	-	-	6N4-2A-4
115	T115LE, LSE	09-	-	-	CB5L-B	-
125	125 Enduro	69-71	-	-	-	12N7-3B
125	AS2C	69	-	-	-	12N5.5-3B
125	AT1E, AT1B, AT1C 125 Enduro	69-71	-	-	CB7L-B	12N7-3B
125	AT2, AT3 125 Enduro	72-73	-	-	CB7L-B	12N7-3B
125	BL125 Beluga	85	-	-	CB7C-A	-
125	DT125	74	-	-	-	6N6-3B-1
125	DT125 Enduro	74-81	-	-	CB7L-B	12N7-3B
125	DT125LC	84-87	-	-	CB3L-B	-
125	DT125R E	88-96	-	-	CB3L-B	-
125	Maxster 125	00-	-	-	CB7L-B	-
125	NXC125	04-	-	GTX7A-BS	-	-
125	RD125	75-76	-	-	-	12N5.5A-3B
125	RD125LC	82	-	-	CB5L-B	-
125	RS125	-	-	-	CB10L-B	12N10-3B
125	RX125	95	-	-	-	6N4B-2A
125	SR125, T	93-95	-	-	-	12N7-3B
125	SV125	90	-	-	-	12N14-3A
125	TDR125, R	93-	-	GTX5L-BS	-	-
125	Teo's	-	-	-	CB7L-B	-
125	TTR125E, LWE	09-	-	GT4L-BS	-	-
125	TTR125E, -S, LE, LES, LWE	03-07	-	GTX4L-BS	-	-
125	TW125	04	YTZ7S	-	-	-
125	TW125	99-01	-	-	CB7C-A	-
125	TZR125, R	-	-	-	CB5L-B	-
125	WR125R, X	09-	-	-	-	12N5.5-4A
125	VP125, R	09-	-	GTX9-BS	-	-
125	XC125, CR	07-09	-	GT7B-BS	-	-
125	XC125 Beluga	86-92	-	-	CB7C-A	-
125	XC125 Cygus-X	04-	-	GTX7A-BS	-	-
125	XC125 Riva	87-01	-	-	CB7C-A	-
125	XC125 TR Cygnus R	00	-	-	CB7C-A	-
125	XC125E	-	-	GTX7A-BS	-	-
125	XC125R, T, TR Cygnus	93-	-	GTX7A-BS	-	-
125	XC125TRB	07	-	GTX7A-BS	-	-
125	XT125	82-83	-	-	-	6N4A-4D
125	XTZ125E, K, XE, XK	-	-	-	CB5L-B	-
125	XV125	97-	-	-	CB10L-A2	-
125	XV125, S Virago	99	-	-	CB5L-B	-
125	XVS125	00	-	-	CB7L-B	-
125	XVS125	01-04	YTZ7S	-	-	-
125	YA6	64-66	-	-	CB10L-B	-
125	YAS1/C	68	-	-	-	12N5.5A-3B
125	YBR125DX	09-	-	-	CB5L-B	-
125	YB125E, C, CE	-	-	-	CB5L-B	-
125	YBR125ED	07-09	-	GTX7L-BS	-	-
125	YBR125EG, EGD	05	-	-	CB5L-B	-
125	YJ125T Vino 125	04-07	-	GTX7A-BS	-	-
125	YP125R Majesty	99-	-	GTX9-BS	CB7L-B2	-
125	YP125, E	09	-	GTX9-BS	CB7L-B2	
125	YZFR125	01-09	-	-	-	12N5.5-3B
125	YW125	09-	-	GT7B-BS	-	-
125	Zuma 125	09-12	-	GT7B-BS	-	-
135	T135SE, SEC, HC	-	-	-	CB5L-B	12N5-3B
150	RX150	95	-	-	CB3L-B	-
150	SR150	93-95	-	-	CB7-A	-
150	XC150 Fly One R	98	-	GTX7A-BS	-	-
150	YP150	01	-	-	CB7L-B	-
150	YP150, E	09-	-	-	CB7L-B2	-

Объем	Модель	Год	High Performance AGM / Premium AGM	Maintenance Free	Heavy Duty	Conventional
YAMAHA продолжение						
175	175 Enduro	69-71	-	-	-	6N2-2A-3
175	CT1, CT1B, CT1C 175 Enduro	69-71	-	-	-	6N2-2A-3
175	CT2, CT3 175 Enduro	72-73	-	-	-	6N4A-4D
175	DT175	07-	-	-	-	6N6-3B-1
175	DT175 Enduro	74-76	-	-	-	6N4B-2A-3
175	DT175 Enduro	78-81	-	-	-	6N6-3B-1
180	RT180G	95	-	-	-	6N6-3B-1
180	XC180 Cygnus	93	-	-	CB10L-A2	-
180	XC180, D, Z Riva	83-85	-	-	CB10L-B	-
180	YP180E	09-	-	-	CB7L-B2	-
185	SR185, Exciter	81-82	-	-	CB7L-B	-
200	AG200E, F, G	93-	-	-	-	6N4B-2A-3
200	AG200FE	-	YTZ7S	-	-	-
200	BW200	86-88	-	-	CB7C-A	-
200	CS3B, CS3C	70-71	-	-	CB9L-A2	-
200	CS5	72	-	-	CB9L-A2	-
200	DT200RE	93	-	-	CB3L-B	-
200	RD200	74-76	-	-	CB9L-A2	-
200	RD200, DX	75-79	-	-	-	12N9-4B-1
200	SDR200	-	-	-	CB3L-B	-
200	TW200 Trailway	87-12	-	-	CB7C-A	-
200	TW200EV, V	87-	-	-	CB7C-A	-
200	TW200W1, C, E	07-	-	-	CB7C-A	-
200	XC200, Z Riva	87-91	-	-	CB10L-B2	-
200	XT200	82-83	-	-	-	6N4A-4D
200	YCS1	68	-	-	CB9L-A2	-
225	TW225E	-	-	-	CB7C-A	-
225	XT225	01-07	YTZ7S	-	-	-
225	XT225 Serow	92-00	-	GTX7L-BS	-	-
225	XT225, E, EC, F, FG, G, GC	93-	-	GTX7L-BS	-	-
225	XT225, V	01-03	YTZ7S	-	-	-
230	TTR230, T, V	05-	-	GTX5L-BS	-	-
230	TTR230E	06-07	YTZ7S	GTX5L-BS	-	-
250	CP250, V	05-	YTZ10S	-	-	-
250	DS6B, DS6C	69-70	-	-	CB5L-B	12N5-3B
250	DS7	72	-	-	-	12N5.5A-3B
250	DT1 250 Enduro	68	-	-	-	6N2-2A-3
250	DT1B, DT1C, DT1E 250 Enduro	69-71	-	-	-	6N2-2A-3
250	DT2 250 Enduro	72	-	-	-	6N4-2A-5
250	DT250 Enduro	74-76	-	-	-	6N4B-2A-3
250	DT250 Enduro	77-79	-	-	-	6N6-3B-1
250	DT250MX	77-81	-	-	-	6N6-3B-1
250	DT3 250 Enduro	73	-	-	-	6N4-2A-5
250	Maxam	-12	YTZ10S	-	-	-
250	Morphous	06-07	YTZ10S	-	-	-
250	RD250, S	73-79	-	-	-	12N5.5A-3B
250	RD250LC	80-82	-	-	-	12N5.5-3B
250	SEROW250	05-	YTZ7S	-	-	-
250	SR250, E, ES, Exciter	80-82	-	-	CB12A-A	12N12A-4A-1
250	SRV250, G	93-	-	GTX7A-BS	-	-
250	SRX250	87	-	-	CB12A-A	12N12A-4A-1
250	TDR250	88-90	-	-	CB5L-B	-
250	TT250, RV	99-	-	GT7B-BS	-	-
250	TTR250, V	99-06	-	GT7B-BS	-	-
250	TZR250	89-90	-	-	CB5L-B	-
250	VP250	07-	-	GTX9-BS	-	-
250	WR250R, RY, RYC, X, XY, XYC	08-12	YTZ7S	-	-	-
250	WR250F, -S	03-09	YTZ7S	GTX5L-BS	-	-
250	WR250FR	07	YTZ7S	-	-	-
250	XG250	04-	YTZ7S	-	-	-

Объем	Модель	Год	High Performance AGM / Premium AGM	Maintenance Free	Heavy Duty	Conventional
YAMAHA продолжение						
250	XMAX		-	GTX9-BS	-	-
250	XS250	77-80	-	-	CB12A-A	-
250	XT250	84	-	-	CB3L-B	-
250	XT250	80-83	-	-	-	6N6-3B-1
250	XT250, X	08-12	YTZ7S	-	-	-
250	XT250V	06	-	GTX7L-BS	-	-
250	XTZ250	07-	-	GTX7L-BS	-	-
250	XV250	07	-	-	CB10L-A2	-
250	XV250YCR V Star 250	01-09	-	-	CB10L-A2	-
250	XV250 Route 66	88-90	-	-	CB10L-A2	-
250	XV250, H Virago	95-03	-	-	CB10L-A2	-
250	XV250, N, L, S Virago	89-98	-	-	CB10L-A2	-
250	XVS250, S	04-	YTZ7S	-	-	-
250	YBR250	07-	-	GTX7L-BS	-	-
250	YP250	07-	YTZ10S	-	-	-
250	YP250R	-	-	GTX9-BS	-	-
250	YP250RA	-	-	GTX9-BS	-	-
250	YP250 DX/ABS Majesty	96-03	-	GT7B-BS	-	-
250	YP250 Majesty	00	-	GT7B-BS	-	-
250	YP250, L, C, G	04-	-	GT9B-BS	-	-
250	YP250, YP250R, YP250RA	07-	-	GTX9-BS	-	-
250	YP250R	07-	-	GTX9-BS	-	-
250	YS250	06-	-	GTX7L-BS	-	-
300	VP300	04-	-	GTX9-BS	-	-
350	BW350, Big Wheel	87-88	-	-	CB12B-B2	-
350	BW350E	86-88	-	-	CB7C-A	-
350	R3	69	-	-	CB5L-B	12N5-3B
350	R5, R5B, R5C	70-72	-	-	-	12N5.5A-3B
350	RD350	73-75	-	-	-	12N5.5A-3B
350	RD350LC, LCF	85	-	-	CB5L-B	-
350	RD350LC, LCF	80-84	-	-	-	12N5.5-3B
350	RD350LC-FH, FN, H, N	86-90	-	-	CB5L-B	-
350	RZ350	84-85	-	-	-	12N5.5-3B
350	TT350E, F	93-94	-	-	-	6N2-2A
350	XT350, H, N	85-00	-	-	CB3L-B	-
350	YR2/C	68	-	-	-	12N5.5-3B
360	DT360 Enduro	74	-	-	-	6N4B-2A-3
360	RT1, RT1B, 360 Enduro	70-71	-	-	-	6N2-2A-3
360	RT2, RT3, 360 Enduro	72-73	-	-	-	6N4-2A-5
360	XS360	76-78	-	-	CB12A-A	12N12A-4A-1
360	XS360-2	77	-	-	CB7L-B	12N7-3B
400	DragStar XVS,XVS400,Classic,Classic 400	-	-	GT12B-BS	-	-
400	DragStar XVS400 (EBL-VH02J/H602E)	10-	YTZ10S	-	-	-
400	DT400 Enduro	75-76	-	-	-	6N4B-2A-3
400	DT400 Enduro	77-78	-	-	-	6N6-3B-1
400	FZR400 (All)	88-90	-	-	CB12AL-A2	-
400	FZR400RR, RRSP	92-	-	GTX9-BS	-	-
400	RD400, S	76-79	-	-	-	12N5.5A-3B
400	SR400 (FI)	10-12	-	GT4B-BS	-	-
400	XJR400R	04-	-	GTX9-BS	-	-
400	XS400 (All)	77-83	-	-	CB12A-A	12N12A-4A-1
400	XV400	95	-	-	CB12AL-A2	-
400	XVS400, C	40	-	GT12B-BS	-	-
400	YP400, A, G, Majesty	04-12	-	GT9B-BS	-	-
450	WR450F, -S	03-09	YTZ7S	-	-	-
500	SR500	78-81	-	-	CB7L-B	12N7-3B
500	FXR500	93	-	-	CB12AL-A2	-
500	RD500LC	84-85	-	-	-	12N5.5-3B
500	SR500	98-	-	GT4B-BS	-	-
500	SR500, SP	78-	-	-	-	12N7-3B

Объем	Модель	Год	High Performance AGM / Premium AGM	Maintenance Free	Heavy Duty	Conventional
YAMAHA продолжение						
500	TMAX	01-	-	GT9B-BS	-	-
500	TMAX	11-	YTZ10S	-	-	-
500	TX500	73-74	-	GTX14AL-BS	CB14L-A2	12N14-3A
500	XP500, A, W (T-Max)	01-	-	GT9B-BS	-	-
500	XP500, A, Y	08-09	YTZ10S	-	-	-
500	XP500 T-Max	09-12	YTZ10S	-	-	-
500	XS500, E	75-78	-	GTX14AL-BS	CB14L-A2	12N14-3A
500	XT500	83-85	-	-	-	6N6-3B-1
500	XT500	86-89	-	-	CB3L-B	-
500	XT500E	93-	-	GTX9-BS	-	-
500	XV500 Virago	83	-	-	CB12A-A	12N12A-4A-1
535	XV535 DX Virago	87-99	-	-	CB12AL-A2	-
530	TMAX	11-	YTZ12S	-	-	-
535	XV535, H, N, S, SE Virago	87-99	-	-	CB12AL-A2	-
550	XJ550 Maxim, R Seca	81-83	-	-	CB12A-A	12N12A-4A-1
550	XT550	82-83	-	-	CB5L-B	12N5-3B
550	XZ550R Virago	82-83	-	-	CB14L-A2	-
550	XZ550R Vision	82-83	-	GTX14AL-BS	CB14L-A2	-
600	FJ600	84-85	-	-	CB12A-A	12N12A-4A-1
600	FZ600	86-88	-	-	CB12A-A	12N12A-4A-1
600	FZ6 (All models)	05-12	-	GT12B-BS	-	-
600	FZR600	89-93	-	-	CB12AL-A2	-
600	FZR600, E, RE, REC	93-	-	-	CB12AL-A2	-
600	FZR600R	89-93	-	-	CB12AL-A2	-
600	FZR600R	94-95	-	GTX12-BS	-	-
600	FZS600, S, Fazer	98-03	-	GT12B-BS	-	-
600	SRX600, H, N	86-90	-	-	CB5L-B	12N5-3B
600	TT600E	94	-	GTX9-BS	-	-
600	TT600RE	04	-	GT9B-BS	-	-
600	TT600S	93	GTX4L-BS	GT4L-BS	-	-
600	TT600T	86-88	-	-	-	6N4-2A-7
600	TT600W	86-92	-	-	-	6N4-2A-7
600	XJ6, Deversion (EU)	-12	-	GT12B-BS	-	-
600	XJ6N, NA, S, SA, SY	09-	-	GT12B-BS	-	-
600	XJ600, H, N	84-91	-	-	CB12A-A	-
600	XJ600N	94-99	-	GTX9-BS	-	-
600	XJ600S	09-	-	GT12B-BS	-	-
600	XJ600S Diversion	92-02	-	GTX9-BS	-	-
600	XJ600S Seca II	92-98	-	GTX9-BS	-	-
600	XT600	84-89	-	-	CB5L-B	-
600	XT600E, EH, EN	90-95	-	GTX9-BS	-	-
600	XT600E, EH, EN, H, N, Z	84-87	-	-	CB5L-B	-
600	XT600KH	91-95	GTX4L-BS	GT4L-BS	-	-
600	XT600Z	83-84	-	-	CB12AL-A2	-
600	YX600 Radian	86-90	-	-	CB12A-A	12N12A-4A-1
600	YZF600FGC, RG, RW	95-	-	GTX12-BS	-	-
600	YZF600R, Thunder Cat	95-07	-	GTX12-BS	-	-
600	YZF-R6	99-00	YTZ10S	GT12B-BS	-	-
600	YZF-R6 (Excl. R6S)	06-12	YTZ10S	-	-	-
600	YZF-R6, R6S	01-07	-	GT9B-BS	-	-
600	YZF-R6, S, SC, SV, Y	01-05	-	GT9B-BS	-	-
650	TX650	73	-	-	CB12A-A	12N12A-4A-1
650	TX650	74	-	GTX14AL-BS	CB14L-A2	12N14-3A
650	X1	70-71	-	-	-	12N5.5-3B
650	X2	72	-	-	-	12N12A-4A-1
650	XJ650 (All models)	80-83	-	-	CB12A-A	12N12A-4A-1
650	XS1	70-71	-	-	-	12N5.5-3B
650	XS2	72	-	-	CB12A-A	12N12A-4A-1
650	XS650, -2, SE	75-83	-	GTX14AL-BS	CB14L-A2	12N14-3A
650	XS650S Heritage Special	78-83	-	-	-	12N14-3A

Объем	Модель	Год	High Performance AGM / Premium AGM	Maintenance Free	Heavy Duty	Conventional
YAMAHA продолжение						
650	XVF600RT, C	05	-	GTX12-BS	-	-
650	XVS650 V-Star (All)	98-13	-	GT12B-BS*	-	-
650	XVS650, W, WC	97-	-	GT12B-BS	-	-
650	XVS650A Drag Star Cla.	99-	-	GT12B-BS	-	-
650	XVS650AY, V, VC	-	-	GT12B-BS	-	-
660	Burgman	-	-	GTX14-BS	-	-
660	MT03	06-12	-	GT9B-BS	-	-
660	SZR660	96-98	-	GTX9-BS	-	-
660	XT660X,R,Z, Tenere (EU)	04-12	-	GT9B-BS	-	-
660	XTZ660 Tenere	91-97	-	GTX9-BS	-	-
700	FZ700, Fazer	86-87	-	GTX14AL-BS	CB14L-A2	-
700	FZX700 Fazer	86-87	-	-	CB14L-A2	-
700	XJ700 Maxim, XJ700X	85-86	-	GTX14AL-BS	CB14L-A2	-
700	XJ700X/S/XS	86	-	-	CB14L-A2	-
700	XV700 Virago	84-87	-	-	CB16AL-A2	-
700	XV700C	86-87	-	-	CB16AL-A2	-
700	XV700SS	86	-	-	CB16AL-A2	-
750	FZ750, Genesis, FZR750	85-94	-	GTX14AL-BS	CB14L-A2	-
750	FZR750	91-	-	GTX9-BS	-	-
750	FZR750RT Genesis	88	-	-	CB14L-A2	-
750	FZX750 Fazer	87-94	-	-	CB14L-A2	-
750	TX750	73-74	GTX20HL-BS	GTX20L-BS	CB16L-B	-
750	XJ750 Maxim	82-83	-	-	SCB14L-A2	-
750	XJ750 Maxim/K	82-83	-	-	CB14L-A2	-
750	XJ750 Seca	82-83	-	-	CB14L-A2	-
750	XJ750M Midnight Maxim	83	-	GTX14AL-BS	CB14L-A2	-
750	XJ750M Midnight Virago	83	-	-	CB14L-A2	-
750	XJ750R Seca	81-83	-	-	SCB14L-A2	-
750	XS750 (All)	77-80	-	GTX14AL-BS	CB14L-A2	12N14-3A
750	XTZ750, H, N Sup. Tenere	89-97	-	-	CB14L-A2	-
750	XV750 Virago (All)	81-97	-	-	CB16AL-A2	-
750	YZF750R, SP	93-97	-	GTX12-BS	-	-
750	YZF-R7, OW02	99	-	GT9B-BS	-	-
800	FZ8	11-12	YTZ10S	-	-	-
850	TDM850, N	91-95	-	GTX12-BS	-	-
850	TRX850	96-99	-	GTX12-BS	-	-
850	XS850 (All)	80-81	-	GTX14AL-BS	CB14L-A2	-
900	TDM900, A	04-12	-	GT12B-BS	-	-
900	XJ900, F	83-91	-	-	CB14L-A2	-
900	XJ900P	-	-	GTX14-BS	-	-
900	XJ900R Seca	83-92	-	GTX14AL-BS	CB14L-A2	-
900	XJ900S Diversion	95-02	-	GTX14-BS	-	-
920	XV920 Virago	82	GTX24HL-BS	-	SC50-N18L-AT	-
920	XV920 Virago	83	-	-	C50-N18L-A	-
920	XV920M Midnight Virago	83	GTX24HL-BS	-	C50-N18L-A	-
920	XV920R Virago	81-83	GTX24HL-BS	-	C50-N18L-A	-
950	Bolt	13-	YTZ14S	-	-	-
950	XVS950A	09-	YTZ14S	-	-	-
950	XVS95CT,Y V Star 950, Tourer	01-09	YTZ14S	-	-	-
1000	FZ1-N, S, SA	06-	YTZ14S	-	-	-
1000	FZ1 Fazer	10-	YTZ14S	-	-	-
1000	FZ1 Fazer GT	11-	YTZ14S	-	-	-
1000	FZR1000	87-90	-	GTX14AL-BS	CB14L-A2	-
1000	FZR1000	91-95	GTX14H-BS	GTX14-BS	-	-
1000	FZR1000 Exup	89-91	-	-	CB14L-A2	-
1000	FZR1000 Exup	92-95	-	GTX14-BS	-	-
1000	FZR1000 Genesis	87-91	-	-	CB14L-A2	-
1000	FZS1000, S, T, FZ1	01-05	-	GT14B-BS	-	-
1000	FZS1000 FZ1	06-12	YTZ14S	-	-	-
1000	GTS1000, A	93-97	-	GTX14-BS	-	-

* Может потребоваться модификация крепления.

Объем	Модель	Год	High Performance AGM / Premium AGM	Maintenance Free	Heavy Duty	Conventional
YAMAHA продолжение						
1000	XV1000 Virago	84-85	-	-	C50-N18L-A	-
1000	XV1000SE Midnight Sp.	83	-	-	C50-N18L-A	-
1000	XV1000SE Virago	86-87	-	-	C50-N18L-A	-
1000	XV1000TR.1	-92	-	-	C50-N18L-A	-
1000	YTZF-R1, W, WC	04-12	YTZ10S	-	-	-
1000	YZF1000R, Thunderace	96-01	GTX14H-BS	GTX14-BS	-	-
1000	YZF-R1, Y, YC	04-09	YTZ10S	-	-	-
1000	YZF-R1	98-03	-	GT12B-BS	-	-
1000	YZF-R1 LEV	06	YTZ10S	-	-	-
1000	YZF-R1S	06	YTZ10S	-	-	-
1100	BT1100	02-	-	GT14B-BS	-	-
1100	FJ1100	84-92	-	GTX14AL-BS	CB14L-A2	12N14-3A
1100	XJ1100 Maxim	82	GTX24HL-BS	-	SC50-N18L-AT	-
1100	XS1100 (All)	78-92	GTX24HL-BS	-	C50-N18L-A	-
1100	XV1100	89-98	-	-	SC50-N18L-AT	-
1100	XV1100 Virago	86-99	GTX24HL-BS	-	C50-N18L-A	-
1100	XV1100G, GC	95	-	-	C50-N18L-A	-
1100	XVS1100	99-	-	GT14B-BS	-	-
1100	XVS1100 Drag Star	99-00	-	GT14B-BS	-	-
1100	XVS1100 V-Star (All)	99-07	-	GT14B-BS	-	-
1100	XVS1100A, W, WC	01-	-	GT14B-BS	-	-
1100	YVX11AWY, AWYC, AY	09-	-	GT14B-BS	-	-
1200	FJ1200	86-90	-	GTX14AL-BS	CB14L-A2	-
1200	FJ1200 (All)	91-93	GTX14H-BS	GTX14-BS	-	-
1200	VMX1200 V MAX	85-07	-	-	CB16AL-A2	-
1200	XJR1200, SP	95-98	-	GTX14-BS	-	-
1200	XT1200Z Super Tenere	11-12	YTZ12S	-	-	-
1200	XVZ12 Venture/Royale	83-85	GTX24HL-BS	-	SC50-N18L-AT	-
1300	FJR1300, A, AP, AS, ASY, AW, AWC S, SC	01-03	-	GT14B-BS	-	-
1300	XJR1300 (EU)	07-12	YTZ14S	-	-	-
1300	XJR1300, SP	99-	-	GT14B-BS	-	-
1300	XVS1300A, AY	07-	-	GTX20L-BS	-	-
1300	XVS13AY V Star 1300, Stryker	01-09	GTX20HL-BS*	GTX20L-BS	-	-
1300	XVZ13CT, CTS	09-	GTX20HL-BS	GTX20L-BS	-	-
1300	XVZ13 Royal Star/Venture (All)	96-13	GTX20HL-BS	GTX20L-BS	-	-
1300	XVZ13 Venture/Royale	86-93	GTX24HL-BS	-	SC50-N18L-AT	-
1300	XVZ1300 AT Tour Classic	99-	-	GTX20L-BS	-	-
1300	XVZ1300 TD	89-91	-	-	SC50-N18L-AT	-
1300	XVZ1300A Royal Star	96-	-	GTX20L-BS	-	-
1300	XVZ1300TF Royal Star	00-	-	GTX20L-BS	-	-
1600	XV1600 Road Star	99-03	GTX20HL-BS	GTX20L-BS	-	-
1600	XV1600A Wild Star	00-	-	GTX20L-BS	-	-
1700	MT-01 (EU)	05-12	-	GT14B-BS	-	-
1700	XV1700A Road Star, Silverado	04-07	GTX20HL-BS	GTX20L-BS	-	-
1700	XV1700ATMV, AV, AVC	-	-	GTX20L-BS	-	-
1700	XV1700P Road Star Warrior	02-09	-	GT14B-BS	-	-
1700	XV1700PC, CMV	02-	-	GT14B-BS	-	-
1700	XV17AWY, AWYC, ATY, ATYC, ATY, ASY, ASYC	-	-	-	-	
1700	VAMX	01-09	YTZ14S	-	-	-
1854	Roadliner, Raider, Stratoliner	01-06	-	GT14B-BS	-	-
1854	XV19CSY, CSYC, CY, CYC	09-	-	GT14B-BS	-	-
1900	XV1900, A, CT	07-	-	GT14B-BS	-	-
1900	XV19SV, SVC, CTSV	06	-	GT14B-BS	-	-
ZengChengHaiLi						
100	HJ100-3	-	-	-	CB5L-B	-
100	HJ100T-A	-	-	GTX7A-BS	-	-
100	HJ100T-E	-	-	GTX7A-BS	-	-

* Hold Down requires modification

Объем	Модель	Год	High Performance AGM / Premium AGM	Maintenance Free	Heavy Duty	Conventional
ZengChengHaiLi продолжение						
125	HJ125	-	-	-	CB7-A	12N7A-3A
125	HJ125-2, 3, 5, 9, 10, 15, 18	-	-	-	-	12N9-4B-1
125	HJ125-7, 6, 6A	-	-	-	CB7-A	-
125	HJ125T, -3, 8, B, D, 2D	-	-	GTX7A-BS	-	-
125	HJ125T	-	-	-	CB5L-B	-
150	HJ150-9, 10	-	-	-	-	12N9-4B-1
150	HJ150ST	-	-	GTX9-BS	-	-
250	HJ250	-	-	-	-	12N9-4B-1
ZongShen Piaggio						
50	FLY-50	-	-	-	CB9-B	-
50	ZIP50 / 50QT	-	-	GTX9-BS	-	-
50	ZIP50	-	-	-	CB4L-B	-
100	ZS100-6	-	-	-	-	6N4-2A
100	BYQ100T-ZE	-	-	GTX7A-BS	-	-
110	LZX110	-	-	-	CB5L-B	-
125	LZX125-2	-	-	-	-	12N7-3B
125	LZX125-4	-	-	-	-	12N9-4B-1
125	ZS125	-	-	-	-	12N7-4A
125	ZS125-65	-	-	GTX7L-BS	-	-
125	BYQ125-2E	-	-	-	-	12N9-4B-1
150	ZS150-15	-	-	GTX7A-BS	-	-
ZUNDAPP						
125	GS125	-	-	-	-	6N11A-3A
125	KS125	-	-	-	-	6N11A-3A
175	KS175	-	-	-	-	6N11A-3A
850	K850 Super	-	-	-	CB9L-B	-

Объем	Модель	Год	High Performance AGM / Premium AGM	Maintenance Free	Heavy Duty	Conventional
AEON (BENZAI)						
50	Cobra/CX-Sport 50	All	-	GTX4L-BS	-	-
90	Cobra/CX-Sport 90	All	-	GTX4L-BS	-	-
100	Cobra/CX-Sport 100	All	-	GTX4L-BS	-	-
ARCTIC CAT						
50	DVX50	06-10	YTZ7S	GTX5L-BS	-	-
90	All Models	-06	-	GTX4L-BS	-	-
90	DVX90	01-06	YTZ7S	GTX5L-BS	-	-
150	150	-13	-	GTX9-BS		
250	All Models	-10		GTX12-BS	-	-
250	DVX250, 2x4	06	-	GTX12-BS	-	-
300	All Models	All	-	GTX14AL-BS	CB14L-A2	-
300	DVX300	01-09	-	GTX12-BS	-	-
366	366	08-12	-	-	CB14-A2	-
400	All Models	All	-	GTX14A-BS	CB14-A2	-
400	DVX400	All	-	GTX9-BS	-	-
450	450,TRV, CORE	11-12	GTX20H-BS	-	-	-
500	All Models	All	-	GTX14A-BS	CB14-A2	-
550	TRV550	01-10	GTX20H-BS	-	-	-
650	4x4 Automatic	04-06	-	GTX14A-BS	CB14-A2	-
400	TRV400	-09	-	-	CB14-A2	-
650	650H1, TBX650, Mudpro	05 -12	-	GTX14A-BS	CB14-A2	-
700	CORE, XT	13	GTX20H-BS	-	-	-
700	TRV, Mudpro, LTD, TBX, Diesel	01-09	GTX20H-BS	-	-	-
700	700H1	-11	GTX20H-BS	-	-	-
1000	Thundercat	-10	GTX20H-BS	-	-	-
1000	Mudpro 1000H2, TRV, 1000i GT, XT	01-10	GTX20H-BS	-	-	-
BOMBARDIER						
	See BRP (Can-AM)	-	-	-	-	-
BRP (Can-Am)						
50	DS50, Quest	02-06	-	GTX4L-BS	-	-
70	DS70	-13	-	GTX4L-BS	-	-
90	DS90, DS90F, Quest	01-02	-	GTX4L-BS	-	-
200	Rally	02-06	-	GTX14A-BS	CB14A-A2	-
250	DS250	01-06	-	GTX12-BS	-	-
400	Outlander 400, XT, MAX	01-04	GTX20HL-BS	GTX20L-BS	-	-
450	DS450	-13	-	GT7B-BS	-	-
500	Traxter (All Models), Quest	99-05	-	-	CB16CL-B	-
500	Traxter (All Models), Quest (Opt)	02-05	GTX24HL-BS	-	C50-N18L-A	-
500	Outlander, MAX, Renegade	-13	GTX20HL-BS	GTX20L-BS	-	-
650	Quest	02-05	-	-	CB16CL-B	-
650	Quest (Opt)	02-05	GTX24HL-BS	-	C50-N18L-A	-
650	Outlander, MAX	-13	GTX20HL-BS	GTX20L-BS	-	-
660	Outlander 660 EFI	06	GTX20HL-BS	GTX20L-BS	-	-
800	Outlander 800 EFI, MAX, Renegade	01-06	GTX20HL-BS	GTX20L-BS	-	-
All	Outlander, Renegade	-09	GTX20HL-BS	GTX20L-BS	-	-
CANNONDALE						
All	All Models	01-03	-	GTX9-BS	-	-
E-TON						
50	All models	04-05	YTZ7S	GTX5L-BS	-	-
50	AXL, TXL, NXL, RXL	99-03	-	GTX4L-BS	-	-
70	Viper 70	-13	YTZ7S	GTX5L-BS	-	-
90	All models	01-04	YTZ7S	GTX5L-BS	-	-
90	AXL, TXL, NXL, RXL	99-03	-	GTX4L-BS	-	-
90	DXL90 Sierra	99-03	-	GTX4L-BS	-	-

Объем	Модель	Год	High Performance AGM / Premium AGM	Maintenance Free	Heavy Duty	Conventional
E-TON продолжение						
150	CXL150 Yukon II	00-13	-	GTX9-BS	-	-
150	YXL150 Yukon	00-03	-	GTX9-BS	-	-
150	Viper150R	-13	-	GTX9-BS	-	-
250	Vector250	-13	-	GTX12-BS	-	-
HONDA						
90	TRX90X, EX	01-06	YTZ7S	GTX5L-BS	-	-
125	ATC125M	86-87	-	GTX12-BS	-	-
125	ATC125M	84-85	-	-	CB9A-A	-
125	TRX125 Fourtrax	87-88	-	GTX9-BS	-	-
125	TRX125 Fourtrax	85-86	-	-	CB9A-A	-
200	ATC200 Big Red	82-84	-	GTX14A-BS	CB14A-A2	-
200	ATC200M	84-85	-	GTX14A-BS	CB14A-A2	-
200	TRX200 Fourtrax	90-96	-	GTX12-BS	-	-
200	TRX200 Fourtrax	84	-	GTX14A-BS	CB14A-A2	-
200	TRX200SX Fourtrax	86-88	-	GTX12-BS	-	-
250	ATC250ES Big Red	85-87	-	GTX12-BS	-	-
250	ATC250SX	85-87	-	GTX12-BS	-	-
250	TRX250 EX, TE, TM	01-01	-	GTX9-BS	-	-
250	TRX250 Fourtrax	85-87	-	GTX12-BS	-	-
250	TRX250 FourTrax Recon, ES	97-07	-	GTX12-BS	-	-
250	TRX250 Recon, ES	97-03	-	GTX12-BS	-	-
250	TR250TE, TM, FourTraxRecon	97-11	-	GTX12-BS	-	-
250	TRX250X, EX	01-01	-	GTX9-BS	-	-
300	TRX300 Fourtrax	88-00	GTX14H-BS	GTX14-BS	-	-
300	TRX300X, EX	93-12	-	GTX9-BS	-	-
300	TRX300FW Fourtrax 4x4	88-00	GTX14H-BS	GTX14-BS	-	-
350	FL350R Odyssey	85	-	GTX12-BS	-	-
350	TRX350 Rancher	00-06	GTX14H-BS	GTX14-BS	-	-
350	TRX350, D Fourtrax 4x4	86-89	GTX14H-BS	GTX14-BS	-	-
400	FL400R Pilot	89-90	GTX14H-BS	GTX14-BS	-	-
400	TRX400 Rancher AT	04-06	GTX14H-BS	GTX14-BS	-	-
400	TRX400X, EX, FourTrax, Sportrax	99-13	-	GTX9-BS	-	-
400	TRX400FW Foreman	95-03	GTX14H-BS	GTX14-BS	-	-
420	TRX420 Rancher 4x4	-13	GTX14H-BS	GTX14-BS	-	-
450	TRX450 Fourtrax Foreman S, ES	98-04	GTX14H-BS	GTX14-BS	-	-
450	TRX450ER, TRX450R	01-06	YTZ7S	-	-	-
500	TRX500FA Fourtrax Rubicon	01-11	GTX14H-BS	GTX14-BS	-	-
500	TRX500FE, FPE, FM, FPM	05-11	GTX14H-BS	GTX14-BS	-	-
500	FourTrax Foreman ES, 4x4	05-09	GTX14H-BS	GTX14-BS	-	-
650	TRX650 FourTrax Rincon (Std.)	03-05	GTX14H-BS	GTX14-BS	-	-
650	(Optional cold starting)	03-04	GTX20HL-BS	GTX20L-BS	-	-
680	TRX680FA Four Trax Rincon	01-06	GTX20HL-BS	GTX20L-BS	-	-
700	TRX700XX	01-08	-	GTX9-BS	-	-
700	MUV700 Big Red	01-08	GTX14H-BS	GTX14-BS	-	-
HYOSUNG						
450	TE450S	-13	-	GTX9-BS	-	-
JOHN DEERE						
-	All Models	All	-	-	CB16CL-B	-
KASEA						
50	Mini Skyhawk	All	-	GTX4L-BS	-	-
50	Skyhawk 50	All	YTZ7S	GTX4L-BS	-	-
65	KS, KU Models	All	-	GTX7A-BS	-	-
90	KS, KU Models	All	-	GTX7A-BS	-	-
90	Skyhawk 90	All	YTZ7S	GTX7A-BS	-	-
125	KS, KU Models, Adventure Buggy	All	-	GTX7A-BS	-	-

МОЩНАЯ И ВЫСОКОПРОИЗВОДИТЕЛЬНАЯ ЛИНЕЙКА ОТ GS

Объем	Модель	Год	High Performance AGM / Premium AGM	Maintenance Free	Heavy Duty	Conventional
KASEA продолжение						
150	Skyhawk 150, Adventure Buggy	All	-	GTX7A-BS	-	-
170	Skyhawk 170	All	-	GTX7A-BS	-	-
250	Skyhawk 250	All	-	GTX7A-BS	-	-
KAWASAKI						
50	KFX50	01-07	YTZ7S	GTX5L-BS	-	-
80	KSF80-A (KFX80)	03-05	YTZ7S	GTX5L-BS	-	-
90	KFX90	01-07	YTZ7S	GTX5L-BS	-	-
110	KLF110-B Mojave	87-88	-	-	CB9L-A2	-
185	KLF185-A Bayou	85-88	-	-	CB10L-B	-
200	KLT200-A, C	81-84	-	-	CB10L-B	-
200	KLT200-B, C	83	-	-	CB12A-A	-
220	KLF220-A Bayou	88-02	-	-	CB10A-A2	-
220	KLF220-A Bayou (CN)	92-02	-	GTX14A-BS	CB14A-A2	-
250	KLF250-A Bayou	03-12	-	-	CB10A-A2	-
250	KLF250-A Bayou (CN)	03-05	-	GTX14A-BS	CB14A-A2	-
250	KLT250-A	82-83	-	-	CB12A-A	-
250	KLT250-C Prairie	83	-	-	CB12A-A	-
250	KLT250-C Prairie	84-85	-	-	CB10L-B	-
300	KEF300-A Lakota	95-00	-	GTX14A-BS	CB14A-A2	-
300	KEF300-A Lakota Sport	01-03	-	GTX14A-BS	CB14A-A2	-
300	KEF300-B Lakota Sport	01-03	-	GTX14A-BS	CB14A-A2	-
300	KLF300-A Bayou	86-87	-	-	CB16CL-B	-
300	KLF300-A Bayou	86-87	-	-	CB16CL-B	-
300	KLF300-B Bayou	88-04	-	GTX14A-BS	CB14A-A2	-
300	KLF300-B Bayou (CN)	92-99	-	-	CB16CL-B	-
300	KLF300-C Bayou 300 4x4	89-04	-	GTX14A-BS	CB14A-A2	-
300	KLF300-C Bayou 300 4x4 (CN)	92-05	-	-	CB16CL-B	-
300	KVF300-A Prairie 300, 4x4	99-02	-	GTX14A-BS	CB14A-A2	-
300	KVF300-A Prairie 300, 4x4 (CN)	99-01	-	-	CB16CL-B	-
300	KVF300-B Prairie 300, 4x4	99-02	-	GTX14A-BS	CB14A-A2	-
300	KVF300-B Prairie 300, 4x4 (CN)	99-02	-	-	CB16CL-B	-
300	KVF300 Brute Force	-13	-	GTX12-BS	-	-
360	KVF360 Prairie	-13	-	GTX14A-BS	CB14A-A2	-
400	KAF400, Mule 600, 610	05-12	-	GTX14A-BS	-	-
400	KLF400-B Bayou 400 4x4	93-00	-	-	CB16CL-B	-
400	KSF400-A (KFX400)	03-06	-	GTX9-BS	-	-
400	KVF400-A Prairie 400 4x4	97-00	-	GTX14A-BS	CB14A-A2	-
400	KVF400-A Prairie 400 4x4 (CN)	97-00	-	-	CB16CL-B	-
400	KVF400-B Prairie 400 4x4	98-00	-	GTX14A-BS	CB14A-A2	-
400	KVF400-B Prairie 400 4x4 (CN)	98-00	-	-	CB16CL-B	-
400	KVF400-C Prairie 400, 4x4	99-02	-	GTX14A-BS	CB14A-A2	-
400	KVF400-C Prairie 400, 4x4 (CN)	99-02	-	KMX14-BS*	-	-
400	KVF400-D Prairie 400, 4x4	99-02	-	GTX14A-BS	CB14A-A2	-
400	KVF400-D Prairie 400, 4x4 (CN)	99-01	-	KMX14-BS*	-	-
450	KFX450R	01-08	-	GTX7L-BS	-	-
540	KAF540, Mule 2010, 2020, 2030	-	-	-	CB16CL-B	-
620	KAF620, Mule 3010 4.4	-	-	-	-	-
620	Advantage Classic	03-07	GTX20HL-BS	GTX20L-BS	-	-
620	Mule 4000	-10	Not available	-	-	-
620	KAF620F, Mule 4010 4x4 (US)	-12	Not available	-	-	-
620	KAF620F, Mule 4010 4x4 (CN)	-12	GTX20HL-BS	-	-	-
620	Mule 4010 Trans4x4 Diesel, Mule4000	-12	Not available	-	-	-
650	4x4 Advantage Classic	02-03	-	KMX14-BS*	-	-
650	KVF650 Brute Force	01-02	-	KMX14-BS*	-	-
700	KVF650-A, B, D Prairie 700, 4X4	04-06	-	KMX14-BS*	-	-
700	KFX700	03-10	-	KMX14-BS*	-	-
700	KVF700-A, B, D Prairie 700, 4x4	04-06	-	KMX14-BS*	-	-
750	KVF750 Brute Force	01-05	-	KMX14-BS*	-	-
750	Teryx All models (US)	08-11	Not Available	-	-	-

* Доступны только у дилеров Kawasaki.

Объем	Модель	Год	High Performance AGM / Premium AGM	Maintenance Free	Heavy Duty	Conventional
KAWASAKI KASEA продолжение						
750	Teryx All Models (CN)	08-11	-	KMX14-BS*	-	-
950	KAF950, Mule 2510, 3010 Diesel	-10	Not available	-	-	-
KTM						
450	SX ATV	08-12	YTZ7S	GTX5L-BS	-	-
450	XC ATV	08-12	YTZ7S	GTX5L-BS	-	-
505	SX ATV	01-08	YTZ7S	GTX5L-BS	-	-
505	SX ATV	08-09	YTZ7S	GTX5L-BS	-	-
525	XC ATV	01-08	YTZ7S	GTX5L-BS	-	-
KYMCO						
50	Mongoose 50	All	-	GTX5L-BS	-	-
50	MXU 50	-	-	GTX9-BS	-	-
50	Maxxer 50	-	-	GTX5L-BS	-	-
90	Mongoose 90	All	YTZ7S	GTX5L-BS	-	-
90	Maxxer 90	-	-	GTX5L-BS	-	-
125	MXER	-	-	GTX9-BS	-	-
150	MXER 150	11-	-	GTX9-BS	-	-
150	MXU150	All	-	GTX9-BS	-	-
250	Maxxer 250	-	-	GTX12-BS	-	-
250	Mongoose, MXU	All	-	GTX12-BS	-	-
250	MXU 250	-	-	GTX12-BS	-	-
300	Maxxer 300	11-	-	GTX12-BS	-	-
300	MXU300	11-	-	GTX12-BS	-	-
300	Maxxer 300	11-	-	GTX12-BS	-	-
300	MXU300	11-	-	GTX12-BS	-	-
300	MXU300SD	All	-	GTX12-BS	-	-
350	Maxxer 400	11-	-	GTX14-BS	-	-
350	MXU 400	11-	-	-	CB14-A2	-
400	MXU 450i	-	-	GTX20L-BS	-	-
450	Maxxer 450	-	-	GTX20L-BS	-	-
500	UXV 500	11-	-	GTX20L-BS	-	-
500	MXU 500	-13	GTX20HL-BS	GTX20L-BS	-	-
500	MXU 500i	-	GTX20HL-BS	GTX20L-BS	-	
550	MXU 550	-	GTX20HL-BS	GTX20L-BS	-	
700	MXU 700	-	GTX20HL-BS	GTX20L-BS	-	
POLARIS						
50	Predator, Outlaw	01-04	YTZ7S	GTX5L-BS	-	-
50	Scrambler	01-02	-	GTX4L-BS	-	-
50	Scrambler	03	YTZ7S	GTX5L-BS	-	-
90	Predator, Sportsman, Outlaw	01-03	YTZ7S	GTX5L-BS	-	-
90	Scrambler, Sportsman	01-02	-	GTX4L-BS	-	-
170	Ranger RZR	-12	-	GTX12-BS	-	-
200	Phoenix, Sawtooth	01-05	-	GTX12-BS	-	-
250	All Models	06-08	-	GTX14A-BS	CB14A-A2	-
250	All models	85-05	-	-	CB14A-A2	-
300	Hawkeye, Sportsman 300	06-10	-	-	CB14-B2	-
325	All Models	87-02	-	GTX14A-BS	CB14A-A2	-
330	Magnum, Trail	01-03	-	GTX14A-BS	CB14A-A2	-
335	Sportsman	98-01	-	GTX14A-BS	CB14A-A2	-
400	All Models	94-12	-	GTX14A-BS	CB14A-A2	-
400	Ranger 400	11-12	-	GTX14A-BS	-	-
425	All Models	95-02	-	GTX14A-BS	CB14A-A2	-
450	Diesel .445 Litre (primary)	99-03	GIX30L-BS	-	-	-
450	Diesel .445 Litre (secondary)	99-03	-	GTX14A-BS	CB14A-A2	-
450	Outlaw 450	07-10	-	GTX9-BS	-	-
500	All Models (Excl. Predator, Sportsman)	99-12	-	GTX14A-BS	CB14A-A2	-
500	Predator, Outlaw	03-06	-	GTX9-BS	-	-

* Доступны только у дилеров Kawasaki.

Объем	Модель	Год	High Performance AGM / Premium AGM	Maintenance Free	Heavy Duty	Conventional
POLARIS продолжение						
500	Ranger 6x6, 4x4	98-04	GIX30L-BS	-	-	-
500	Ranger 4x4	04-10	GIX30L-BS	-	-	-
500	Ranger 4x4	11-12	-	GTX14A-BS	-	-
500	Sportsman	-11	GIX30L-BS	-	-	-
500	Sportsman HO	96-13	-	GTX14A-BS	-	-
525	Outlaw 525	08-12	-	GTX9-BS	-	-
600	Sportsman	04-05	GIX30L-BS	-	-	-
700	Ranger 6x6, 4x4	06-10	GIX30L-BS	-	-	-
700	Sportsman, Military	02-08	GIX30L-BS	-	-	-
700	Sportsman	-10	GIX30L-BS	-	-	-
800	Sportsman	01-05	GIX30L-BS	-	-	-
800	Ranger RZR	09-12	GTX20HL-BS	-	-	-
800	Ranger RZR 4	10-12	GIX30L-BS	-	-	-
800	Ranger	10-12	GIX30L-BS	-	-	-
QIANJIANG						
100	ATV100	-	-	GTX4L-BS	-	-
50	ATV50	-	-	GTX4L-BS	-	-
SUZUKI						
50	LT-Z50 QuadSport	06-12	YTZ7S	GTX5L-BS	-	-
80	LT80 QuadSport 80	87-06	YTZ7S	GTX5L-BS	-	-
90	LT-Z90 QuadSport	07-12	YTZ7S	GTX5L-BS	-	-
160	LT160 E QuadRunner	89-04	-	-	CB9A-A	-
160	LT-F160 QuadRunner	91-00	-	-	CB9A-A	-
230	LT230E QuadRunner	87	Not available	-	-	-
230	LT230E QuadRunner	88-93	-	GTX12-BS	-	-
230	LT230GE QuadRunner	85-86	-	-	CB10A-A2	-
230	LT-F230 QuadRunner	86-87	-	-	CB10A-A2	-
250	LT-4WD QuadRunner	87-99	-	GTX14A-BS	CB14A-A2	-
250	LT-F250 QuadRunner	88-01	-	GTX14A-BS	CB14A-A2	-
250	LT-F250, Ozark	01-02	-	GTX12-BS	-	-
250	LT-F250F QuadRunner	99-02	-	GTX14A-BS	CB14A-A2	-
250	LT-Z250 QuadSport	04-12	-	GTX12-BS	-	-
280	LT-F4WDX KingQuad	91-99	-	GTX14A-BS	CB14A-A2	-
300	LT-F4WDX KingQuad	99-02	-	-	CB14A-A2	-
300	LT300E QuadRunner 300E	87-89	-	GTX14A-BS	CB14A-A2	-
300	LT-F300F KingQuad	99-02	-	GTX14A-BS	CB14A-A2	-
400	LT-A400 Eiger 2WD, F Eiger 4WD	02-07	GTX14H-BS	GTX14-BS	-	-
400	LT-F400 Eiger 2WD, F Eiger 4WD	02-07	GTX14H-BS	GTX14-BS	-	-
400	LT-Z400 QuadSport	01-03	-	GTX9-BS	-	-
400	LT-A400F King Quad	-13	GTX14H-BS	GTX14-BS	-	-
450	LT-A450X King Quad	07-12	GTX14H-BS	GTX14-BS	-	-
450	LT-R450 QuadRacer	06-10	YTZ10S	GTX7A-BS	-	-
500	LT-A500 King Quad	-13	GTX20CH-BS	-	-	-
500	LT-A500F QuadMaster	00-01	-	GTX16-BS-1	-	-
500	LT-A500F Vinson 4WD	04-07	GTX20CH-BS	-	-	-
500	LT-A500F Vinson 4WD	02-03	GTX20CH-BS	GTX16-BS	-	-
500	LT-F500F Vinson Manual 4WD	04-07	GTX20CH-BS	-	-	-
500	LT-F500F Vinson Manual 4WD	03	GTX20CH-BS	GTX16-BS	-	-
700	LT700 Twin Peaks	04-	GTX20CH-BS	-	-	-
700	LT-A700X King Quad	05-07	GTX20CH-BS	-	-	-
700	LT-V700F Twin Peaks	04-05	GTX14H-BS	GTX14-BS	-	-
750	LT-A750 King Quad	01-07	GTX20CH-BS	-	-	-
YAMAHA						
50	YFM50 Raptor	04-09	-	-	-	12N7D-3B
80	YFM80 Badger	85-01	-	-	-	12N7D-3B
80	YFM80 Grizzly	05-08	-	-	-	12N7D-3B

Объем	Модель	Год	High Performance AGM / Premium AGM	Maintenance Free	Heavy Duty	Conventional
YAMAHA продолжение						
80	YFM80R Raptor	02-08	-	-	-	12N7D-3B
90	YFM90R Raptor	01-09	YTZ7S	GTX5L-BS	-	-
100	YFM100 Champ	87-91	-	-	-	12N7D-3B
125	YFA-1 Breeze	89-04	-	-	CB12C-A	-
125	YFM125A, G	09-	-	-	-	-
125	YFM125S, G	01-04	-	-	CB12C-A	-
125	YFM12R, Raptor	01-11	YTZ7S	-	-	-
200	YFM200 Moto-4	85	-	GTX14A-BS	CB14A-A1	-
200	YFM200, DX Moto 4	85-89	-	GTX14A-BS	CB14A-A1	-
200	YTM200, E, ER Tri Moto	83-85	-	GTX14A-BS	CB14A-A1	-
225	YFM225 Moto 4	86-88	-	GTX14A-BS	CB14A-A1	-
225	YTM225DR Tri Moto	85-86	-	GTX14A-BS	CB14A-A1	-
225	YTM225DR, DX Tri-Moto	83-86	-	GTX14A-BS	CB14A-A1	-
225	YTM225DX Tri Moto	83-85	-	GTX14A-BS	CB14A-A1	-
230	YFM25BY	09-	-	-	CB14A-A2	-
230	YFU-1/T Pro-Hauler	89	-	GTX14A-BS	CB14A-A1	-
250	YFB250, F Timber Wolf	92-00	-	-	CB12C-A	-
250	YFM25 Bear Tracker	99-04	-	GTX14A-BS	CB14A-A2	-
250	YFM250 Moto 4	89-91	-	GTX14A-BS	CB14A-A1	-
250	YFM25B Big Bear	07-10	-	GTX14A-BS	CB14A-A2	-
250	YFM25B Bruin	05-06	-	GTX14A-BS	CB14A-A2	-
250	YFM25RY, RSEY	09-	YTZ7S	-	-	-
250	YFM25R Raptor,R	01-08	YTZ7S	-	-	-
300	Grizzly 300 Automatic	01-11	-	GTX12-BS	-	-
350	YFM 350RV Raptor	04-05	YTZ10S	-	-	-
350	YFM350	07-09	YTZ10S	-	-	-
350	YFM350A, FWA, FWAN, AS	07-09	-	GTX14A-BS	-	-
350	YFM35B Bruin	04-06	-	GTX14A-BS	-	-
350	YFM35ER Moto 4	87-95	-	GTX14A-BS	CB14A-A1	-
350	YFM35F, U Big Bear	87-99	-	GTX14A-BS	CB14A-A1	-
350	YFM35FW Big Bear 4WD	87-99	-	GTX14A-BS	CB14A-A1	-
350	YFM30FX Wolverine	95-05	-	-	CB12C-A	-
350	YFM35FX Wolverine	06-10	-	GTX14A-BS	-	-
350	YFM35FG Grizzly	01-07	-	GTX14A-BS	-	-
350	YFM35R Raptor	01-04	YTZ10S	-	-	-
350	YFM35U Big Bear 2WD	87-99	-	GTX14A-BS	CB14A-A1	-
350	YFM35X Warrior	87-03	-	-	CB12C-A	-
350	YFP35 TerraPro	88	-	GTX14A-BS	CB14A-A1	-
400	YF40FG Grizzly	07-08	GTX20HL-BS	GTX20L-BS	-	-
400	YFM40FB Big Bear	00-12	GTX20HL-BS	GTX20L-BS	-	-
400	YFM40FG Grizzly	07-08	-	GTX14A-BS	-	-
400	YFM40FW Kodiak	93-95	-	GTX14A-BS	CB14A-A1	-
400	YFM40FW Kodiak/Automatic	03-06	-	GTX14A-BS	-	-
400	YFM40FW Kodiak/Automatic	96-02	GTX20HL-BS	GTX20L-BS	-	-
400	YFM40FWN Big Bear	00-03	GTX20HL-BS	GTX20L-BS	-	-
400	YFM40N Big Bear 2WD	00-03	GTX20HL-BS	GTX20L-BS	-	-
450	YFM45FG Grizzly	01-07	-	GTX14A-BS	-	-
450	YFM45FW Automatic	03-09	GTX20HL-BS	GTX20L-BS	-	-
450	YFM45FX Wolverine	03-10	GTX20HL-BS	GTX20L-BS	-	-
450	YFZ450	01-04	-	GT7B-BS	-	-
450	YFZ450X	-12	-	GT7B-BS	-	-
450	YZF450R, RSEY	09-12	YTZ7S	-	-	-
450	YFZ450V	-09	-	GT7B-BS	-	-
550	YFM5FGPY, GPSEY	09-	GTX20HL-BS	GTX20L-BS	-	-
550	YMF5FG Grizzly	-13	GTX20HL-BS	GTX20L-BS	-	-
550	YFM550G, GY	09-	GTX20HL-BS	GTX20L-BS	-	-
550	YMF550 Grizzly	-09	GTX20HL-BS	-	-	-
600	YFM600FW Grizzly	98-01	GTX20HL-BS	GTX20L-BS	-	-
600	YFV600FW Grizzly	98-01	GTX20HL-BS	GTX20L-BS	-	-
660	YFM66FA Grizzly	02-08	GTX20HL-BS	GTX20L-BS	-	-

МОЩНАЯ И ВЫСОКОПРОИЗВОДИТЕЛЬНАЯ ЛИНЕЙКА ОТ GS

Объем	Модель	Год	High Performance AGM / Premium AGM	Maintenance Free	Heavy Duty	Conventional
YAMAHA продолжение						
660	YFM66R Raptor	01-05	GTX14H-BS	GTX14-BS	-	-
700	YFM7FG Grizzly	01-07	GTX20HL-BS	GTX20L-BS	-	-
700	YFM70R Raptor	01-06	-	GT9B-BS	-	-
700	YFM70RY	09-	-	GT9B-BS	-	-
700	YFM700FWA	09-	GTX20HL-BS	GTX20L-BS	-	-

Объем	Модель	Год	High Performance AGM / Premium AGM	Maintenance Free	Heavy Duty	Conventional
ARTIC CAT						
550	Prowler 550	-09	GTX24HL-BS	-	-	-
550	Prowler 550	01-10	GIX30L-BS*	-	-	-
570	F570, T570, Bearcat	08-12	-	-	CB18-A	-
650	Prowler 650	06-09	GTX24HL-BS*	-	-	-
700	Prowler 700	09	GTX24HL-BS	-	-	-
700	Prowler 700	01-10	GIX30L-BS*	-	-	-
800	F8 LXR, F800, M800	07-12	GTX20H-BS	-	-	-
1000	Mudpro 1000H2	10-12	-	-	-	-
1000	Prowler 1000	-13	GIX30L-BS	-	-	-
1000	Wildcat 1000, Wildcat 1000 LTD	-13	GIX30L-BS	-	-	-
1100	Z1, T Z1, F1100, M1100, Bearcat	01-01	GTX20H-BS	-	-	-
-	T500, T570	-09	-	-	CB18-A	-
-	500cc & Over	91-01	-	-	CB18-A	-
-	All EFI Models 500cc & Over (W/O El.-Starter)	94-01	-	-	CB7-A	-
-	All EFI Models 500cc & Over (W/O El.-Starter)	91-93	-	-	CB14L-A2	-
-	all carburetor models					
-	All Models Less than 500cc	-93	-	-	CB14L-A2	-
-	All Models Less than 500cc	94-01	-	-	CB14-A2	-
-	Bearcat 340, 440	95-00	-	GTX14A-BS	CB14-A2	-
-	Bearcat 570	04-09	GTX24HL-BS	-	-	-
-	Bearcat 570, WT Turbo	06-07	GTX24HL-BS	-	-	-
-	Bearcat WT	05-07	GTX24HL-BS	-	-	-
-	Bearcat WT	03-04	GTX24HL-BS	-	-	-
-	Bearcat WT	95-02	GTX20H-BS	GTX20-BS	CB18-A	-
-	Bearcat WT Turbo	06-07	GTX24HL-BS	-	-	-
-	Cheetah	91-93	-	GTX14AL-BS	CB14L-A2	-
-	Cheetah	86-90	-	-	CB16L-B	-
-	Cougar	95-98	GTX20H-BS	GTX20-BS	CB18-A	-
-	Cougar	91-94	-	GTX14AL-BS	CB14L-A2	-
-	Cougar	85-90	-	-	CB16L-B	-
-	Crossfire 500	07	GTX20H-BS	-	-	-
-	Crossfire 600	06-07	GTX20H-BS	-	-	-
-	Crossfire 700	06	GTX20H-BS	-	-	-
-	El Tigre 5000	87-88	-	GTX14AL-BS	CB14L-A2	-
-	EXT	95-97	-	-	-	12N7-4A
-	EXT	92-94	-	GTX14AL-BS	CB14L-A2	-
-	EXT	89-91	-	-	CB16L-B	-
-	EXT (Carb)	95-96	GTX20H-BS	GTX20-BS	CB18-A	-
-	EXT (EFI)	98	GTX20H-BS	GTX20-BS	CB18-A	-
-	EXT (EFI)	95-97	-	-	-	12N7-4A
-	EXT 600	97-98	GTX20H-BS	GTX20-BS	CB18-A	-
-	EXT Dlx (EFI)	97-98	GTX24HL-BS	-	-	-
-	EXT Special	91-92	-	GTX14AL-BS	CB14L-A2	-
-	F6, F8, F1000	07-09	GTX20H-BS	-	-	-
-	F5	07-09	GTX20H-BS	GTX20-BS	CB18-A	-
-	F5 LXR	07-12	-	-	CB18-A	-
-	Firecat	03-06	GTX24HL-BS	-	-	-
-	Jag AFS	89-91	-	GTX14AL-BS	CB14L-A2	-
-	Jag AFS L/T	89-93	-	GTX14AL-BS	CB14L-A2	-
-	Jag Liquid	96	-	GTX14A-BS	CB14-A2	-
-	Jag Z	94	-	GTX14A-BS	CB14-A2	-
-	Jag Z	93	-	GTX14AL-BS	CB14L-A2	-
-	Jag, Jag Dlx	94-99	-	GTX14A-BS	CB14-A2	-
-	Jag, Jag Dlx	85-93	-	GTX14AL-BS	CB14L-A2	-
-	Jaguar	07	GTX20H-BS	-	-	-
-	King Cat 900	04-06	GTX24HL-BS	-	-	-
-	Lynx, M5, M6, M7	91-93	-	GTX14AL-BS	CB14L-A2	-
-	Lynx, M5, M6, M7	91-93	-	-	CB14L-A2	-
-	M 5	05-06	GTX20H-BS	-	-	-
-	M 6	05-07	GTX20H-BS	-	-	-

Объем	Модель	Год	High Performance AGM / Premium AGM	Maintenance Free	Heavy Duty	Conventional
ARTIC CAT продолжение						
-	M 6	05-07	GTX20H-BS	-	-	-
-	M 7	05-06	GTX20H-BS	-	-	-
-	Mountain Cat	01	GTX20H-BS	GTX20-BS	CB18-A	-
-	Mountain Cat 500	02	GTX20H-BS	GTX20-BS	CB18-A	-
-	Mountain Cat 570	02-04	GTX24HL-BS	-	-	-
-	Mountain Cat 600	02-04	GTX20H-BS	GTX20-BS	CB18-A	-
-	Mountain Cat 800	02-04	GTX24HL-BS	-	-	-
-	Mountain Cat 900	03-04	GTX24HL-BS	-	-	-
-	Mountain Cat 1000	02	GTX20H-BS	GTX20-BS	CB18-A	-
-	Pantera	99-01	GTX20H-BS	GTX20-BS	CB18-A	-
-	Pantera	95-98	GTX24HL-BS	-	-	-
-	Pantera	94	GTX20H-BS	GTX20-BS	CB18-A	-
-	Pantera	86-93	-	GTX14AL-BS	CB14L-A2	-
-	Pantera	80-85	-	-	CB16L-B	-
-	Pantera 550, 600	02-05	GTX20H-BS	GTX20-BS	CB18-A	-
-	Pantera 800	02-04	GTX24HL-BS	-	-	-
-	Panther	94-96	-	GTX14A-BS	CB14-A2	-
-	Panther	89-93	-	GTX14AL-BS	CB14L-A2	-
-	Panther	80-88	-	-	CB16L-B	-
-	Panther 340	97-00	-	GTX14A-BS	CB14-A2	-
-	Panther 370	01-07	-	GTX14A-BS	CB14-A2	-
-	Panther 440	97-03	-	GTX14A-BS	CB14-A2	-
-	Panther 550	97-01	GTX20H-BS	GTX20-BS	CB18-A	-
-	Panther 570	02-07	GTX24HL-BS	-	-	-
-	Panther 660	06-07	GTX24HL-BS	-	-	-
-	Powder Extreme, Powder Special	97-98	GTX20H-BS	GTX20-BS	CB18-A	-
-	Powder Special	95-97	GTX20H-BS	GTX20-BS	CB18-A	-
-	Prowler	94	-	-	CB7-A	12N7-4A
-	Prowler	90-93	-	GTX14AL-BS	CB14L-A2	-
-	Prowler 2-Up	95	GTX20H-BS	GTX20-BS	CB18-A	-
-	Prowler Special	91-92	GTX20H-BS	GTX20-BS	CB18-A	-
-	Prowler 550	-10	GTX24HL-BS	-	-	-
-	Prowler 650	06-10	GTX24HL-BS	-	-	-
-	Prowler 700	-10	GTX24HL-BS	-	-	-
-	Puma	94-96	-	GTX14A-BS	CB14L-A2	-
-	Sabercat 500	04-06	GTX20H-BS	GTX20-BS	CB18-A	-
-	Sabercat 600, 700	04-06	GTX24HL-BS	-	-	-
-	Super Jag	89-92	-	GTX14AL-BS	CB14L-A2	-
-	Super Jag	87-88	-	-	CB16L-B	-
-	T500, T570	-09	-	-	CB18-A	-
-	T660 Touring	04-06	GTX24HL-BS	-	-	-
-	T660 Turbo	04-07	GTX24HL-BS	-	-	-
-	T660 Turbo Touring	04-07	GTX24HL-BS	-	-	-
-	Thundercat	97-02	GTX20H-BS	GTX20-BS	CB18-A	-
-	Wildcat (EFI)	95-96	-	-	CB7-A	12N7-4A
-	Wildcat (EFI)	93	-	-	CB16L-B	-
-	Wildcat MC	94	-	-	CB7-A	12N7-4A
-	Wildcat Touring	95-96	-	-	CB7-A	12N7-4A
-	Z	98-01	-	GTX14A-BS	CB14-A2	-
-	Z 370, 440	02-07	-	GTX14A-BS	CB14-A2	-
-	Z 570	02-08	GTX24HL-BS	-	-	-
-	ZL 500	02	GTX20H-BS	GTX20-BS	CB18-A	-
-	ZL 550, 600	02-03	GTX20H-BS	GTX20-BS	CB18-A	-
-	ZL 800	02-03	GTX24HL-BS	-	-	-
-	ZR (EFI)	95-96	-	-	CB7-A	12N7-4A
-	ZR 500, 600	01-02	GTX20H-BS	GTX20-BS	CB18-A	-
-	ZR 800	02-03	GTX24HL-BS	-	-	-
-	ZR 900	03-06	GTX24HL-BS	-	-	-
-	ZRT	97-02	GTX20H-BS	GTX20-BS	CB18-A	-

Объем	Модель	Год	High Performance AGM / Premium AGM	Maintenance Free	Heavy Duty	Conventional
BOMBARDIER						
-	See BRP - SKI-DOO	-	-	-	-	-
BRP – SKI-DOO						
-	All 4-stroke	03	GTX24HL-BS	-	-	-
-	All Models	-	GTX24HL-BS	-	C50-N18L-A	-
-	CK3 Types	99-03	GTX24HL-BS	-	C50-N18L-A	-
-	ZX Types	99-01	-	-	-	-
-	ZX Types	02-03	GTX20HL-BS	GTX20L-BS	-	-
550	Grand Touring, Renegade	-13	-	GTX20L-BS	-	-
KAWASAKI						
-	All Models	All	GTX24HL-BS	-	C50-N18L-A	-
POLARIS						
750	FS Wide Track	10-12	-	-	-	-
800	Rush, RMK, Pro, Assailt, SWBK	12	GTX20HL-BS	GTX20L-BS	-	-
900	Ranger RZR	11-12	GIX30L-BS	-	-	-
900	Ranger Diesel	11-12	Not available	-	-	-
All EFI (RXL, 500 EFI)	93-97	-	-		CB9A-A	
-	All Electric Start Kits	85-93	GTX24HL-BS	-	C50-N18L-A	-
-	All Electric Start Kits	94-05	-	GTX14A-BS	CB14A-A2	-
-	All Other Models	92-05	-	GTX14A-BS	CB14A-A2	-
-	Indy, Indy Trail	84-91	GTX24HL-BS	-	C50-N18L-A	-
-	Sprint (Electric-Starter)	86-90	-	-	C60-N24-A	-
544	Trail, Trail Touring	-10	-	GTX14A-BS	CB14A-A2	-
550	IQ, LXT, Shift	-13	GTX20HL-BS	-	-	-
-	Rush, IQ ,Shift, Switchback, RMK	09-12	GTX20HL-BS	-	-	-
600	Wide Track	10-12	-	-	-	-
600	IQ Touring	-10	-	GTX14A-BS	-	-
600	IQ, Shift, Switchback, RMK	01-09	GTX20HL-BS	-	-	-
600	Shift, Switchback, RMK	09-10	GTX20HL-BS	GTX20L-BS	-	-
600	Rush	01-10	GTX20CH-BS	-	-	-
600	Switchback, RMK	01-11	GTX20CH-BS	-	-	-
750	FS/FST	06-10	GTX20HL-BS	GTX20L-BS	-	-
750	Turbo Switchback, Turbo Dragon	06-10	GTX20HL-BS	GTX20L-BS	-	-
750	Turbo LX, IQ	08-12	GTX20HL-BS	GTX20L-BS	-	-
YAMAHA						
80	SV80E Sno-Scoot	88-90	-	-	CB7L-B	12N7-3B
125	SV125E Sno-Sport	90-91	-	GTX14AL-BS	CB14L-A2	12N14-3A
300	CF300 Inviter	86-90	-	-	CB16AL-A2	-
340	CS340 Ovation Deluxe/LE	89-98	-	GTX14AL-BS	CB14L-A2	12N14-3A
340	EC340 Excel III	81-88	-	GTX14AL-BS	CB14L-A2	12N14-3A
340	ET340E Enticer	79	GTX24HL-BS	-	C50-N18L-A	-
340	ET340E Enticer	80	-	GTX14AL-BS	CB14L-A2	12N14-3A
480	PZ480E Phazer Deluxe	84-89	-	GTX14AL-BS	CB14L-A2	12N14-3A
480	PZ480E Phazer II LE, SS	90-98	-	GTX14AL-BS	CB14L-A2	12N14-3A
480	VT480 Venture GT	92-93	-	GTX14AL-BS	CB14L-A2	12N14-3A
480	VT480 Venture XL	91-97	-	GTX14AL-BS	CB14L-A2	12N14-3A
480	VT480TR Venture TR Electric	98	-	GTX14AL-BS	CB14L-A2	12N14-3A
500	Phazer	-13	GTX14H-BS	GTX14-BS	-	-
500	Venture Lite	-13	GTX14H-BS	GTX14-BS		-
500	PZ500DX Phazer 500 Deluxe	01	-	-	CB16AL-A2	-
500	PZ50, GT, MP, MT, RT, VT	09-	-	GTX14A-BS / GTX14-BS	-	-
500	VT500 Venture 500	97-01	-	-	CB16AL-A2	-
500	VT500 Venture 500 XL	99-00	-	-	CB16AL-A2	-
500	VX500E Vmax	94-01	-	-	CB16AL-A2	-

МОЩНАЯ И ВЫСОКОПРОИЗВОДИТЕЛЬНАЯ ЛИНЕЙКА ОТ GS

Объем	Модель	Год	High Performance AGM / Premium AGM	Maintenance Free	Heavy Duty	Conventional
YAMAHA продолжение						
540	EC540 Excel	79-80	GTX24HL-BS	-	C50-N18L-A	-
540	VK540E, II, III	89-03	-	-	CB16AL-A2	-
540	XL540 XLV	85-90	-	-	CB16AL-A2	-
570	EX570E Exciter	88-90	-	-	CB16AL-A2	-
570	EX570E Exciter II LE	91-93	-	-	CB16AL-A2	-
600	VT600 Venture 600	97-98	-	-	CB16AL-A2	-
600	VT600 Venture 600	99-06	GTX24HL-BS	-	C50-N18L-A	-
600	VX600DX Vmax 600 Deluxe	99-01	GTX24HL-BS	-	C50-N18L-A	-
600	VX600E/DX Vmax 600 LE/DX	94-96	-	-	CB16AL-A2	-
600	VX600ER Vmax 600 ER	02-03	GTX24HL-BS	-	C50-N18L-A	-
600	VX600XTC Vmax 600 XTC	97-98	-	-	CB16AL-A2	-
700	SXV700ER SXViper ER	02-05	GTX24HL-BS	-	C50-N18L-A	-
700	VT700 Venture 700	98-04	GTX24HL-BS	-	C50-N18L-A	-
700	VX700DX Vmax 700 Deluxe	99-00	GTX24HL-BS	-	C50-N18L-A	-
700	VX700ER Vmax 700 ER	01-02	GTX24HL-BS	-	C50-N18L-A	-
700	VX700XTCD Vmax 700 XTC Deluxe	98	GTX24HL-BS	-	C50-N18L-A	-
500	Phazer	-12	GTX14H-BS	GTX14-BS	-	-
500	Venture Lite	-12	GTX14H-BS	GTX14-BS	-	-
973	Vector	-09	GTX20HL-BS	GTX20L-BS	-	-
973	RS Viking Professional	01-09	GTX20HL-BS	GTX20L-BS	-	-
973	RS90GT, LTGT	09-	GTX20HL-BS	GTX20L-BS	-	-
1000	Apex	01-09	GTX14H-BS	GTX14-BS	-	-
1000	RS1000S, GT, RS	-	GTX20HL-BS	GTX20L-BS	-	-
1000	RX1000R RX (All Models)	03-05	GTX20HL-BS	-	-	-
1000	RX10GT	09-	GTX14H-BS	GTX14-BS	-	-
1000	RX10 LTGT, MT, MTR, RTR	09-	GTX14H-BS	GTX14-BS	-	-
1049	FX10RTRS, XT	09-	GTX20HL-BS	GTX20L-BS	-	-
1049	FX Nitro	-13	GTX20HL-BS	GTX20L-BS	-	-
1049	RS Venture	-13	GTX20HL-BS	GTX20L-BS	-	-
1049	RS Vector	-13	GTX20HL-BS	GTX20L-BS	-	-
1049	RS Viking proffesional	09-12	GTX20HL-BS	GTX20L-BS	-	-
1049	RST90GT	09-	GTX20HL-BS	GTX20L-BS	-	-
1049	RST90TF	09-	GTX20HL-BS	GTX20L-BS	-	-

Объем	Модель	Год	High Performance AGM / Premium AGM	Maintenance Free	Heavy Duty	Conventional
ARCTIC CAT						
500	Prowler 500	11-	-	-	-	-
550	Prowler 550	-09	GTX24HL-BS	-	-	-
550	Prowler 550	10-12	GIX30L-BS	-	-	-
650	Prowler 650	06-09	GTX24HL-BS	-	-	-
650	Prowler 650	06-09	GTX24HL-BS	-	-	-
700	Prowler 700	-09	GTX24HL-BS	-	-	-
700	Prowler 700	10-12	GIX30L-BS	-	-	-
1000	Prowler 1000	-12	GIX30L-BS	-	-	-
KAWASAKI						
300	KAF300, Mule 500, 520, 550	-	-	GTX14A-BS	CB14A-A2	-
400	KAF400, Mule 600, 610	05-10	-	GTX14A-BS	CB14A-A2	-
450	KAF450, Mule 1000	-	-	-	CB16CL-B	-
540	KAF540, Mule 2010, 2020, 2030	-	-	-	CB16CL-B	-
620	Advantage Classic	03-07	GTX20HL-BS	GTX20L-BS	-	-
620	KAF620, Mule 2500, 2510, 2520	-	-	-	CB16CL-B	-
620	KAF620, Mule 3000, 3010, 3020	-	GTX20HL-BS	GTX20L-BS	-	-
620	KAF620, Mule 3010 4x4	-	-	-	CB16CL-B	-
620	KAF620F, Mule 4010 4x4 (CN)	-13	GTX20HL-BS	GTX20L-BS	-	-
620	Mule 4000	-12	Not available	-	-	-
620	KAF620F, Mule 4010 4x4 (US)	-12	-	-	-	-
620	Mule 4010 Trans4x4, Diesel, Mule 4000	-12	Not available	-	-	-
750	Teryx All Models	08-12	Not available	-	-	-
950	KAF950, Mule 2510, 3010 Diesel	-10	Not Available	-	-	-
PIAGGIO						
-	Ape Mix	01-	-	-	CB9-B	-
-	Ape50 FL	93	-	-	CB9-B	-
-	Ape50 FL2	-	-	-	CB9-B	-
POLARIS						
170	Ranger RZR	-12	-	GTX12-BS	-	-
400	Ranger 400	01-11	-	GTX14A-BS	CB14-B2	-
500	Ranger 4x4	04-10	GIX30L-BS*	-	-	-
500	Ranger 4x4s	01-11	-	GTX14A-BS	CB14-B2	-
570	RZR 570, EPS	01-12	-	GTX14A-BS	CB14-B2	-
800	Rabger, RZR	01-09	GTX20HL-BS	-	-	-
800	Ranger RZR 4	01-10	GIX30L-BS	-	-	-
800	Ranger	01-10	GIX30L-BS*	-	-	-
800	Ranger RZR	01-11	GIX30L-BS	-	-	-
800	Ranger Diesel	01-11	Not available	-	-	-
800	Ranger XP	13	Not available	-	-	-
SUZUKI						
620	QUV620F	05	GTX20HL-BS	GTX20L-BS	-	-
YAMAHA						
-	Rhino	All	Not available	-	-	-

Объем	Модель	Год	High Performance AGM / Premium AGM	Maintenance Free	Heavy Duty	Conventional
AQA-JET CO.						
430	Aqua-Jet SX1	91	-	-	CB16-B	-
432	Aqua-Jet Sx1	89-90	-	-	CB16-B	-
ARCTIC CAT						
640	Tiger Shark	97-99	-	GTX14AL-BS	CB14L-A2	-
770	Tiger Shark	97-99	-	GTX14AL-BS	CB14L-A2	-
-	Tiger Shark (All Models)	93-01	-	-	CB16CL-B	-
ARCTOCO						
650	Tiger Shark (All Models)	93-98	-	-	CB16CL-B	-
BOMBARDIER						
	See BRP - SEA-DOO	-	-	-	-	-
BRP – SEA-DOO						
-	All Models	88-93	GTX20HL-BS	GTX20L-BS	CB16L-B	-
-	All Other Models	94-07	-	-	CB16CL-B	-
780	3D	-07	-	-	CB16CL-B	-
FAZER						
430	All Models	88-89	-	-	CB16-B	-
HONDA						
1235	AquaTrax F/R-12, F/R-12X	02-09	GTX20HL-BS	GTX20L-BS	-	-
1470	AquaTrax F-15, F-15X	01-03	GTX20HL-BS	GTX20L-BS	-	-
KAWASAKI (Jet Ski)						
300	JS300 TS, SX	86-91	-	-	CB16CL-B	-
300	JS399-A	87-91	-	-	CB16CL-B	-
400	JS400	76	GTX20HL-BS	GTX20L-BS	CB16L-B	-
440	JS440	87-92	-	-	CB16CL-B	-
440	JS440	77-86	GTX20HL-BS	GTX20L-BS	CB16L-B	-
550	JS550	82-85	GTX20HL-BS	GTX20L-BS	CB16L-B	-
550	JS550, SX	86-95	-	-	CB16CL-B	-
650	JF650 TS	89-96	-	-	CB16CL-B	-
650	JF650 X2	86-95	-	-	CB16CL-B	-
650	JL650 SC	91-95	-	-	CB16CL-B	-
650	JS650 SX	87-95	-	-	CB16CL-B	-
650	MATE	91	-	-	CB16CL-B	-
650	SC	-	-	-	CB16CL-B	-
750	JH750 B1-b3	93-95	-	-	CB16CL-B	-
750	JH750 E1,F2,G1,G2	95-99	GTX20HL-BS	GTX20L-BS	-	-
750	JH750 SS, ST, Xi, XiR	92-99	-	-	CB16CL-B	-
750	JH750 ST, Zxi	95-97	GTX20HL-BS	GTX20L-BS	-	-
750	JH750 SX,ZX	92-95	-	-	CB16CL-B	-
750	JH750 Xi	93-99	-	-	CB16CL-B	-
750	JH750 XiR	94	-	-	CB16CL-B	-
750	JH750 Zxi	95-97	GTX20HL-BS	GTX20L-BS	-	-
750	JS750 SX, ZX	92-95	-	-	CB16CL-B	-
750	JS750 SXi, SXi Pro	95-02	GTX20HL-BS	GTX20L-BS	-	-
750	JT750 STS, STX	96-98	GTX20HL-BS	GTX20L-BS	-	-
750	JT750 XiR, ST, STS	94-95	-	-	CB16CL-B	-
750	Super Sport Xi	93	-	-	CB16CL-B	-
750	Xi Sport	99	-	-	CB16CL-B	-
800	JS800 SX-R	01-03	GTX20HL-BS	GTX20L-BS	-	-
900	JH900 ZXi	95-97	GTX20HL-BS	GTX20L-BS	-	-
900	JT900 STS, STX	97-05	GTX20HL-BS	GTX20L-BS	-	-
1100	JH1100 ZXi	96-03	GTX20HL-BS	GTX20L-BS	-	-

Объем	Модель	Год	High Performance AGM / Premium AGM	Maintenance Free	Heavy Duty	Conventional
KAWASAKI (Jet Ski) продолжение						
1100	JH1100-B Ultra 130	01-04	GTX20HL-BS	GTX20L-BS	-	-
1100	JT1100 STX	97-03	GTX20HL-BS	GTX20L-BS	-	-
1100	JT1100 ZXi	96-03	GTX20HL-BS	GTX20L-BS	-	-
1200	JH1200-A, B Ultra 150	99-05	GTX20HL-BS	GTX20L-BS	-	-
1200	JT1200-A-B, C, STX-R, STX-12F	02-07	GTX20HL-BS	GTX20L-BS	-	-
1500	JT1500-A, STX, STX-15F	01-04	GTX20HL-BS	GTX20L-BS	-	-
1500	JT1500B, C, 250X, Ultra LX,	01-07	GTX20HL-BS	GTX20L-BS	-	-
KYMCO						
400	MAXXER 400	11-	-	GTX20L-BS	-	-
400	MXU 400	11-	-	GTX12-BS	-	-
500	UXV 500	11-	-	GTX20L-BS	-	-
POLARIS						
-	All Models	All	-	-	CB16CL-B	-
S.O.S. MARINE MFG						
-	All Models	All	GTX20H-BS	GTX20-BS	CB16-B	-
ULTRANAUTICS						
800	All Models	87-92	-	-	53030	-
800	Wet Bike	87-92	-	-	53030	-
800	Wet Bike	85-86	-	-	-	CHD4-12
-	Jet Star1250 (Boat)	88-90	-	-	53030	-
-	Jet Star1260 (Boat)	91	-	-	53030	-
WET JET INTERNATIONAL						
-	All Models	All	GTX20H-BS	GTX20-BS	CB16-B	-
YAMAHA						
All	All Wave Runner Models	87-09	-	-	CB16CL-B	-
All	All Wave Runner Models	87-08	-	-	-	-
700	Superjet	01-09	-	-	CB16CL-B	-
1100	VX	01-09	-	-	CB16CL-B	-
1800	FX, FZR, FZS, VXS, VXR	01-09	-	-	CB16CL-B	-

ДЛЯ ЗАПИСЕЙ

Премиальная AGM технология делает аккумуляторы лучше

В AGM-батареях блоки электродов находятся в плотно сжатом состоянии, что обеспечивает надежную защиту батареи от повреждений, вызванных вибрацией. Компактное расположение блоков электродов также обеспечивает целостность активной массы пластины, что значительно увеличивает срок службы батареи. AGM-сепараторы снижают внутреннее сопротивление батареи, в результате чего батареи имеют улучшенный прием заряда и более высокие токовые характеристики по сравнению с батареями, созданными по другим технологиям.

ПЛАМЕГАСИТЕЛЬ
Находясь в системе газоотведения батареи, исключает возможность попадания искры внутрь моноблока, что предотвращает риск взрыва батареи.

МЕЖЭЛЕМЕНТНЫЕ СОЕДИНЕНИЯ
Обеспечивают эффективную передачу тока и максимальные пусковые токи.

СПЕЦИАЛЬНЫЙ ДИЗАЙН РЕШЕТОК
Свинцово-кальциевый сплав обеспечивает защиту от коррозии и вибрации, обеспечивает долгий срок службы батареи.

СПЕЦИАЛЬНЫЙ АКТИВНЫЙ МАТЕРИАЛ
Обеспечивает высокие токовые характеристики и увеличенный срок службы.

ПОЛИПРОПИЛЕНОВАЯ КРЫШКА И КОРПУС
Обеспечивают надежную защиту батареи от механических и химических воздействий при экстремальных условиях эксплуатации.

AGM-СЕПАРАТОРЫ
Сепараторы из стекловолокна (AGM) полностью абсорбируют электролит, чем делают аккумулятор абсолютно непроливаемым.

GS YUASA
Next to you

WWW.GS-YUASA.SU

GS YUASA
Next to you

Интеллектуальное универсальное зарядное устройство

GS YUASA BC-12065Z

Универсальное устройство **для всех основных видов техники**, - автомобилей, мотоциклов, скутеров, гидроциклов, снегоходов, квадроциклов и т.д.

AGM

Возможность зарядки как традиционных аккумуляторов с жидким электролитом, так и современных **гелевых и AGM-аккумуляторов**.

Безопасная и эффективная зарядка АКБ **в автоматическом режиме** за счет применения встроенного микропроцессора, нормирующего подачу тока в зависимости от типа и состояния заряжаемой батареи.

Защита от короткого замыкания вследствие **«переполюсовки»** при неправильном подключении устройства к АКБ.

Японские технологии и стандарты качества сборки изделия. Протестировано и официально рекомендовано для использования крупнейшим производителем аккумуляторных батарей в Японии **GS YUASA**.

WWW.GS-YUASA.SU

В 2004 году два крупных производителя аккумуляторных батарей YUASA Corporation и Japan Storage Battery Co., Ltd. организовали совместное предприятие GS Yuasa Corporation с целью интегрировать свои усилия по продвижению продукции на международном рынке. В результате была образована транснациональная корпорация с 13 % долей мирового рынка свинцово-кислотных батарей, крупнейшая во всей Азии и Японии в частности.

GS + YUASA = GS YUASA

Продукция под брендом GS от мирового лидера по производству мотоциклетных батарей GS Yuasa производится на собственных заводах корпорации в Японии и Тайване.

90 % всех производимых в мире мотоциклов оснащаются аккумуляторными батареями GS Yuasa. Корпорация поставляет свои батареи на конвейеры таких производителей как Harley-Davidson, Honda, Indian, Kawasaki, Polaris, Victory, Yamaha, Buell, Cannondale, Excelsior-Henderson.

Аккумуляторные батареи GS предназначены для запуска двигателей мотоциклов, скутоеров, квадроциклов, снегоходов, газонокосилок, электрогенераторов и прочей техники.

ОФИЦИАЛЬНЫЙ ПРЕДСТАВИТЕЛЬ В РОССИИ, БЕЛАРУСИ И КАЗАХСТАНЕ.

RULink

ООО «Рулинк»
664007, Россия, г. Иркутск,
ул. Декабрьских событий, 109
тел./факс +7 (3952) 48-58-68
www.gs-yuasa.su